The FERGUSON SYSTEM

Harry Ferguson, Ltd.
Coventry

TRACTOR PARTS LIST 1949

Ferguson Tractors and *Ferguson* Implements are designed and built for maximum performance and longest possible life. All replacement service parts and sub-assemblies are manufactured with the same scrupulous care and precision that is exercised in the production of the original *Ferguson* parts.

Stock and sell only genuine *Ferguson* Spare Parts.
Your customers expect it of you.

The FERGUSON SYSTEM
TRADE MARK

COPYRIGHT, 1949

HARRY FERGUSON LTD.
COVENTRY
ENGLAND

PRINTED IN ENGLAND

Arrangement

In order to facilitate the rapid replacement of parts the Ferguson Tractor has been divided into groups of related assemblies having connecting or attaching parts.

Commencing at the rear, each group is catalogued next in order to its nearest or adjacent group, the Parts List finishing at the front end of the Tractor. In the description of each part only the NOUN or MAIN NAME appears in BOLD TYPE.

A comprehensive description of each part and its function is given and where two major assemblies are exactly alike but are handed, one side only is illustrated.

The information contained in this Parts List includes the following :—

Part No.
Description.
Quantity used per unit.
Special notes for identification.

Illustrations

Illustrations always appear on the page opposite to, or directly above the text.

Attaching parts having a natural relationship are covered by the same arrow and reference number—example : Bolt, Nut, Lockwasher.

If more than one bolt of the same size is used in the same location, one bolt only is shown.

For quantity used, refer to the quantity column.

Some illustrations may show only lockwasher and nut. The related bolt or stud will be found in a group at the point where the two assemblies are connected.

Numerical Index

Reference to any part number is provided in the numerical index.

This index lists all parts in numerical sequence and shows the figure together with page number.

All standard parts are listed in numerical order with page number given.

Group Index

Fig. No.	Group	Page No.
1	DRIVER'S SEAT and RELATED PARTS	5
2	HYDRAULIC LIFT, COVERS and RELATED PARTS	7
3	LIFT SHAFT and RELATED PARTS	11
4	HYDRAULIC PUMP ASSEMBLY	13
5	UPPER and LOWER LINKS and RELATED PARTS	17
6	LEVELLING BOX ASSEMBLY and RELATED PARTS	19
7	POWER TAKE OFF ASSEMBLY	21
8	HYDRAULIC P.T.O. SHIFTER LEVER, FORK and RELATED PARTS	23
9	PULLEY ATTACHMENT ASSEMBLY	25
10	WHEELS and FENDERS	29
11	BRAKE ASSEMBLY	31
12	BRAKE RODS, PEDALS and RELATED PARTS	35
13	CENTRE AXLE, HOUSING and RELATED PARTS	39
14	REAR AXLE HOUSING and RELATED PARTS	41
15	DIFFERENTIAL ASSEMBLY	45
16	INSTRUMENT PANEL and STEERING ASSEMBLY	49
17	SELECTOR MECHANISM and RELATED PARTS	53
18	TRANSMISSION	57
19	TRANSMISSION CASE and RELATED PARTS	61
20	CLUTCH ASSEMBLY	65
21	ENGINE DETAILS TE.20	67
22	PISTON, CONNECTING ROD, SLEEVES and RELATED PARTS TE.20	79
23	VALVES and PUSH ROD ASSEMBLY TE.20	81
24	CYLINDER HEAD and RELATED PARTS TE.20	83
25	WATER PUMP ASSEMBLY and FAN TE.20	87
26	THROTTLE CONTROLS	88
27	CARBURETTOR ASSEMBLY TE.20	91
28	FUEL VALVE, AIR CLEANER and RELATED PARTS TE.20	95
29	ELECTRICAL EQUIPMENT COMPLETE with WIRING	97
30	RADIATOR and HOOD ASSEMBLY	103
31	FRONT AXLE and RELATED PARTS	109
32	FRONT HUB and SPINDLE	115
33	MUFFLER ASSEMBLY and RELATED PARTS	118
34	CYLINDER BLOCK with CRANKSHAFT, FLYWHEEL and RELATE DPARTS TE.A.20	121
35	CAMSHAFT, TIMING COVER and GOVERNOR DETAILS TE.A.20	125
36	PISTON, CONNECTING ROD, SLEEVE and RELATED PARTS TE.A.20	129
37	OIL SUMP, OIL PUMP and DISTRIBUTOR SHAFT DETAILS TE.A.20	131
38	CYLINDER HEAD and RELATED PARTS TE.A.20	137
39	WATER PUMP ASSEMBLY and FAN TE.A.20	143
40	OIL FILTER (INCLINED) TE.A.20	145
41	OIL FILTER (VERTICAL) TE.A.20	147
42	CARBURETTOR (ZENITH) TE.A.20	151
43	AIR CLEANER and RELATED PARTS TE.A.20	155
	TRACTOR PARTS—NUMERICAL INDEX	156
	STANDARD PARTS—NUMERICAL INDEX	164
	ELECTRICAL DETAILS—NUMERICAL INDEX	165
	STEERING ALTERNATIVES	167

Identification of Bolts, Nuts, etc.

APPLICABLE TO TRACTOR AND IMPLEMENTS

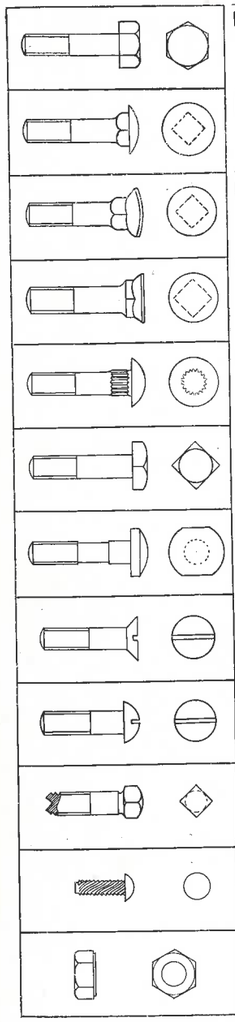

BH—Hexagon head bolt.
BHTD—Hexagon head bolt, thread end drilled.
BHHD—Hexagon head bolt, head end drilled.

BC—Carriage head bolt.

BK—Cultivator head bolt.

BP—Plough head bolt.

BR—Rib Neck Carriage bolt.

BS—Square head bolt.

BB—Button head bolt.

SF—Flat head machine screw.

SR—Round head machine screw.

SS—Set screw, square head, cup point.

SD—Drive screw, round head.

NH—Hexagon head nut.
NHJ—Hexagon head jam nut.

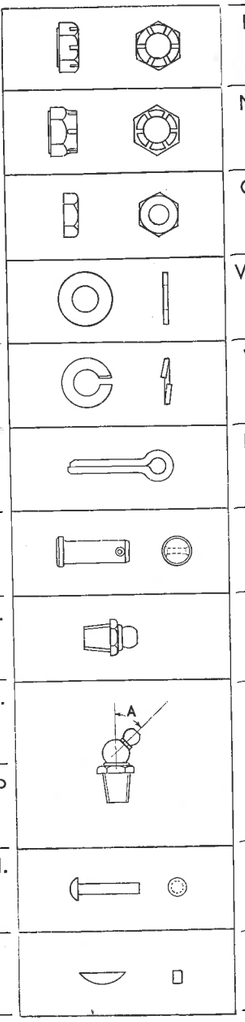

NT—Slotted hexagon nut.

NC—Castle nut.

CNX—Hexagon machine screw nut.

W F—Flat washer.

WL—Spring lockwasher.

PC—Cotter Pin.

PS—Shoulder Pin.

12PLF—Straight—$\frac{1}{8}''$ Briggs.
12PLFR—Straight with pressure relief fitting.
25 SLF—Straight—$\frac{1}{4}''$—28 thds.

	Angle "A"	
12 PLF 30	30-35°	$\frac{1}{8}''$ Briggs thread
12 PLF 45	45°	,, ,,
12 PLF 67	$67\frac{1}{2}°$	,, ,,
12 PLF 67R	$67\frac{1}{2}°$	with pressure relief fitting
12 PLF 90	90°	
25 SLF 45	38-45°	$\frac{1}{4}''$ Amer. thread
25 SLF 90	90°	,, ,,

RB—Button head rivet.
RC—Countersunk head rivet.
RF—Flat head rivet.
RW—Wagon box head rivet.

WK—Woodruff key.

Taking a $\frac{5}{16}'' \times 2''$ long fine thread hexagon Parkerised bolt as an example, the part No. is determined thus :—

1. The first two decimal figures of the diameter are quoted as the first two figures of the part number, thus the $\frac{5}{16}''$ dia. bolt will start "31" (i.e. the decimal equivalent of $\frac{5}{16}''$ is .3125).
2. The type of thread is indicated next—"F" for fine thread (C for coarse) the part No. now becomes "31F."
3. This is followed by the Part Number Group, which for a bolt is "B" (N for nut, W for washer, etc.) the part number is now "31 FB."
4. Then comes the type of head, "H" for hexagon (C for carriage, K for cultivator head, etc.) the part No. is now "31 FBH."
5. The bolt length, which comes next, is quoted in hundredths of an inch, so that the part No. for the bolt will now be "31 FBH 200."
6. Lastly, the protective finish or heat treatment is shewn ("A" for case hardened, "B" for Parkerised, "C" for case hardened and Parkerised). So the final part number becomes "31 FBH 200 B."

Instructions

IN THE USE OF THIS BOOK

The arrangement of the illustrations and parts lists in this book has been planned for easy reference.

For example : In Fig. 1, reference number 3 indicates the driver's seat attaching bolt.

In the parts list below the illustration, reference number 3 brackets the bolt, nut and lockwasher.

This system holds throughout the book, providing accurate pictorial location, and assuring you quick reference from illustration to description, with complete details of each item.

MODEL TE20 & TEA20

TRACTOR PARTS LIST

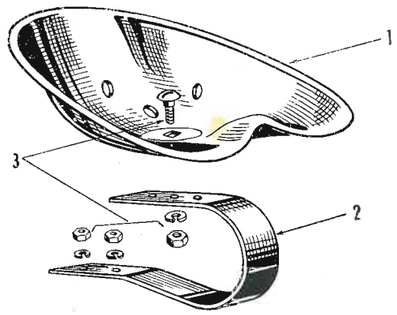

FIG. 1

Ref. No.	Part No.	Description	No. Off	Remarks
		FIG. 1 DRIVERS' SEAT AND RELATED PARTS		
1	9536	**Seat** Assembly—Drivers'	1	
2	7062	**Spring**—Drivers' Seat	1	
3	1221	**Bolt**—Seat to Spring	1	
	44WL	**Lockwasher**—Seat to Spring—Spring to Cover	3	
	44FNH	**Nut**—Seat to Spring—Spring to Cover	3	

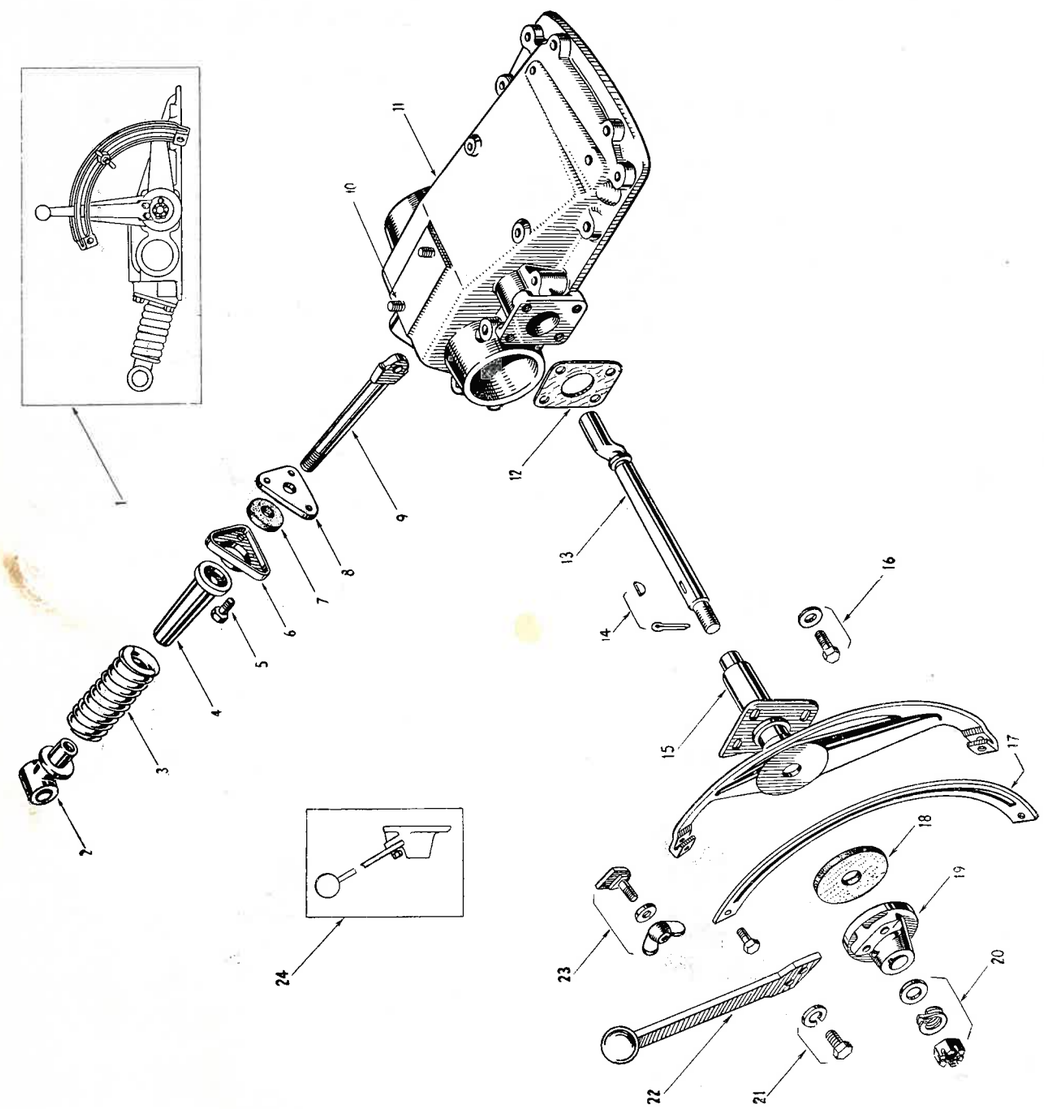

FIG. 2

Ref. No.	Part No.	Description	No. Off	Remarks
		FIG. 2 HYDRAULIC LIFT COVER AND RELATED PARTS		
1	9501	**Hydraulic Lift Assembly**—Comprising items 2 through 24 and 1 through 22 (Fig. 3)	1	
2	4258	**Yoke**—Control Spring. Matched with 4257—serviced only in pairs	1	
3	1064	**Spring**—Adjusting	1	
4	1005	**Seat**—Spring	1	
5	1477	**Bolt**—Plate to Cover	3	
6	1099	**Support**—Spring Seat	1	
7	1020	**Washer**—Felt	1	
8	1002	**Plate**—Cover	1	
9	4257	**Plunger**—Spring Control. Matched with 4258—serviced only in pairs	1	
10	1152	**Stud**—Spring to Cover	2	
11	8508	**Cover**	1	
12	1069	**Gasket**—Quadrant to Cover	1	
	8574	**Quadrant** and **Lever** assembly. Not serviced as an assembly, order items 13 through 23		
13	4201	**Shaft**—Control Lever	1	
14	1241	**Key**—Woodruff—Control Arm to Shaft	1	
	12PC88	**Pin**—Cotter—Control Arm to Shaft	1	
15	8509	**Quadrant Assembly**	1	
16	44WFH	**Washer**—Flat—Quadrant to Cover	4	
	44CBH94	**Bolt**—Hex.—Quadrant to Cover	4	
17	31CBH38	**Bolt**—Retainer to Quadrant	2	
	7045	**Retainer**	1	
18	1062	**Disc**—Friction—Control Lever	1	
19	1009	**Plate**—Friction. Not serviced separately Order 4016 Assy.	1	
20	44WF	**Washer**—Flat—Lever to Shaft	1	
	1010	**Washer**—Spring—Lever to Shaft	1	
	44FNT	**Nut**—Slotted—Lever to Shaft	1	

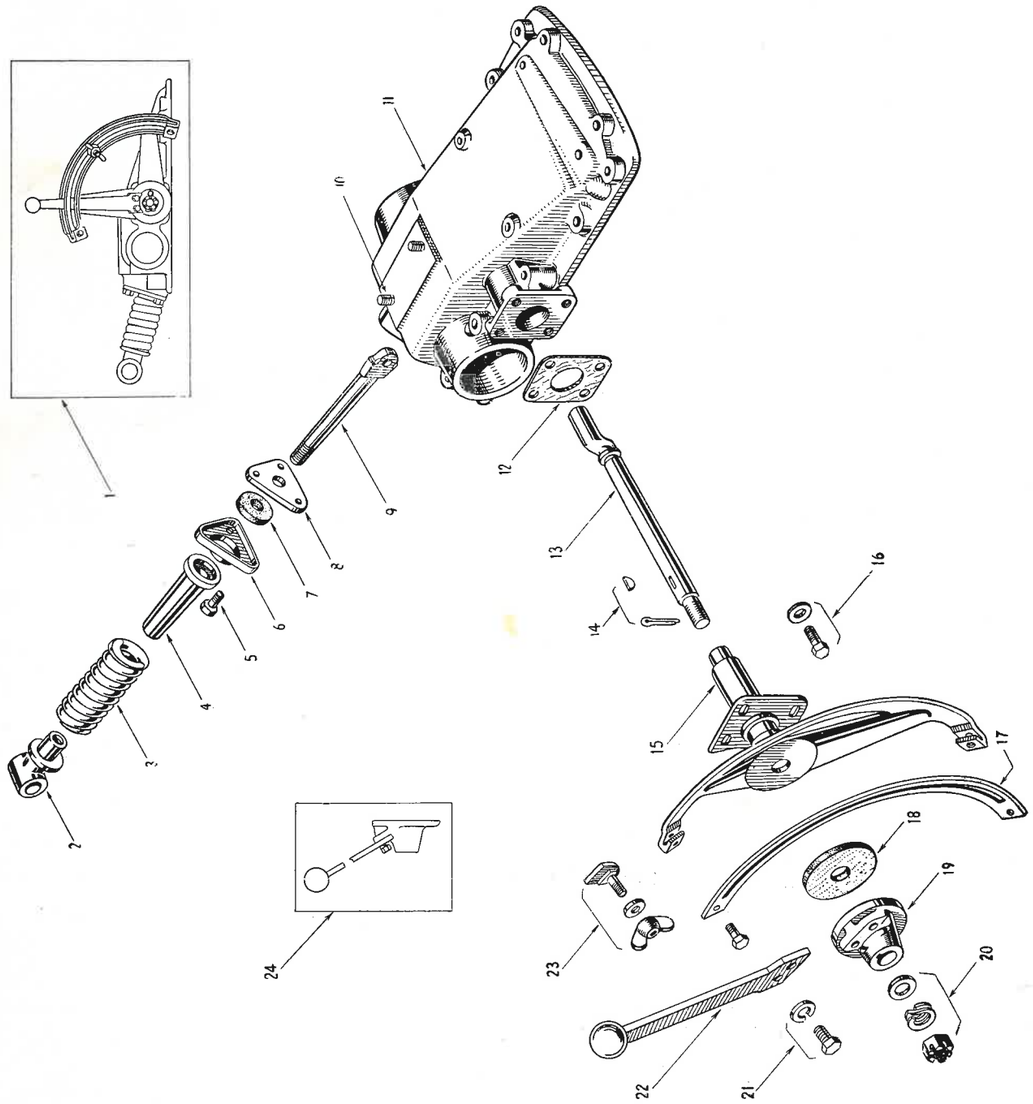

FIG. 2

Ref. No.	Part No.	Description	No. Off	Remarks
21	25CBH44	**Bolt**—Lever to Plate	2	
	25WL	**Washer**—Lock—Lever to Plate	2	
22	4013	**Lever Assembly.** Not serviced separately Order 4016 Assy.	1	
23	25WF	**Washer**—Flat—Control Lever Stop	1	
	1153 or 1815	**Nut**—Wing	1	
	1803	**Stop Assembly**—Lever Retainer	1	
24	4016	**Control Lever** and **Friction Plate** Assembly ... ... Composed of items 19, 21 and 22	1	

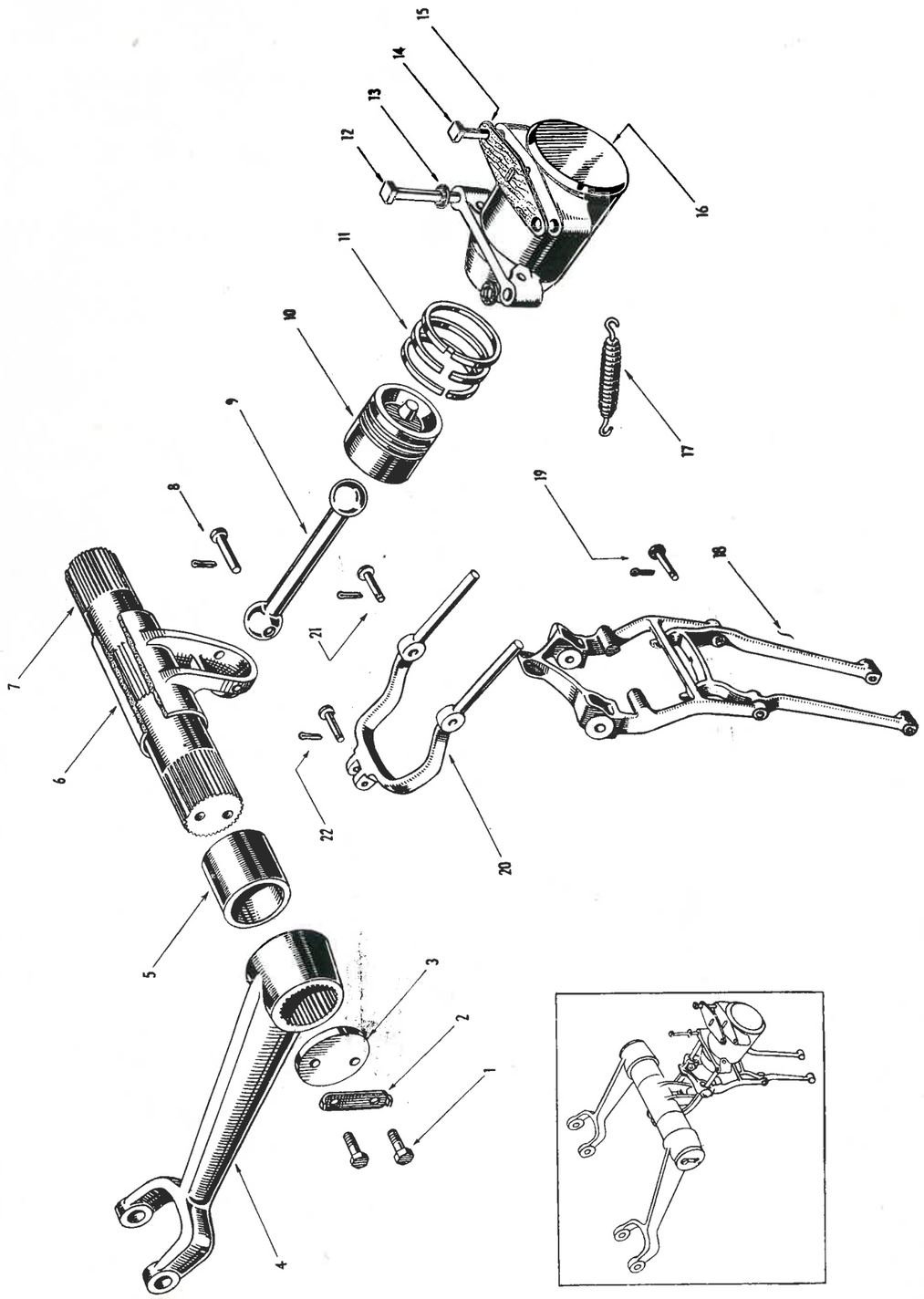

FIG. 3

Ref. No.	Part No.	Description	No. Off	Remarks
		FIG. 3 LIFT SHAFT AND RELATED PARTS		
		Hydraulic lift assembly—continued—including items 2 through 24 (Fig. 2).		
1	44FBH68	**Bolt**—Arm—to Shaft	4	
2	1074	**Washer**—Lock—Special	2	
3	1065	**Washer**—Arm to Shaft	2	
4	7007	**Arm**—Lift Shaft	2	
5	1001	**Bushing**—Lift Shaft	2	
6	7026	**Arm**—Ram—Lift Shaft	1	
7	7008	**Shaft**—Hydraulic Lift	1	
8	31PS212	**Pin**—Clevis—Connecting Rod to Ram Arm	1	
	09PC50	**Pin**—Cotter—Clevis Pin	1	
9	1068	**Rod**—Connecting—Ram Arm to Piston	1	
10	1004	**Piston**	1	
11	1063	**Ring**—Piston	3	
12	44FBS500	**Bolt**—Cylinder to Cover	2	
	1148	**Nut**—Cylinder to Cover	2	
13	1066	**Gasket**—Cylinder to Cover	2	
14	44FBS332	**Bolt**—Cylinder to Cover	2	
	1148	**Nut**—Cylinder to Cover	2	
15	1067	**Gasket**—Cylinder to Cover	1	
16	7187	**Cylinder**	1	
17	1013	**Spring**—Retraction—Hydraulic Fork	1	
18	7001	**Fork Assembly**—Hand Lift Control, composed of Fork Top, Fork Bottom and item 19	1	
	7004	**Fork**—Top } Not serviced separately—		
	7003	**Fork**—Bottom } Order 7001		
19	25PS88	**Pin**—Clevis, Fork Top to Fork Bottom	2	
	25PS81	**Pin**—Used with pressed steel forks	2	
	06PC50	**Pin**—Cotter Fork Bottom	2	
20	4004	**Fork**—Spring Control	1	
21	1977	**Pin**—Clevis—Spring Control Fork to Hand Control Fork ...	2	
	12PC75	**Pin**—Cotter—Clevis Pin	2	
22	38PS131	**Pin**—Clevis—Plunger to Spring Control Fork	1	
	09PC62	**Pin**—Cotter—Clevis Pin...	1	

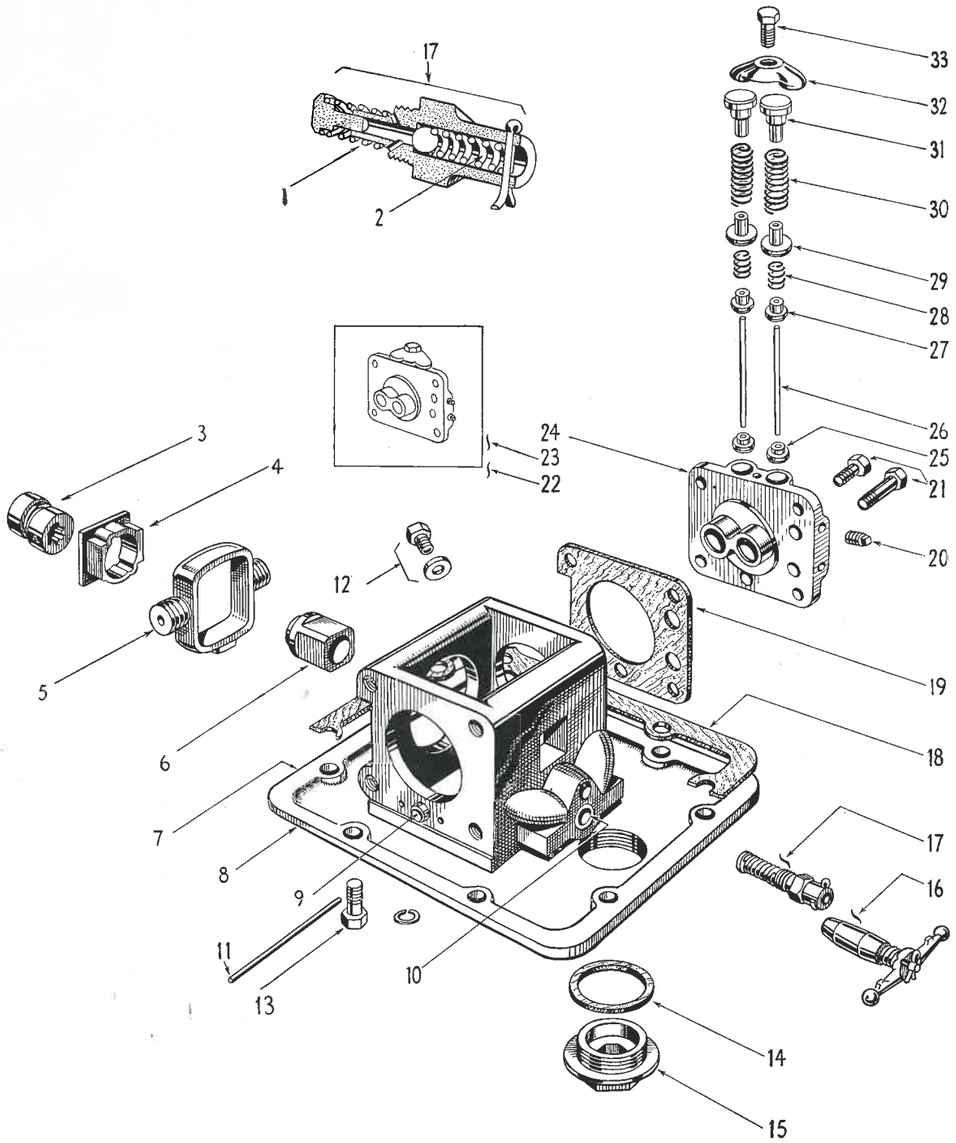

FIG. 4

Ref. No.	Part No.	Description	No. Off	Remarks
		FIG. 4 HYDRAULIC PUMP ASSEMBLY		
	8507	**Hydraulic Pump Assembly**... ... ... Comprising :—	1	
1	1058	**Spring**—Check Valve	1	
2	1057	**Spring**—Valve Retainer	1	
3	4045	**Cam**	1	
4	1042	**Block**—Cam	2	
5	4009	**Piston**—Hydraulic Pump	2	
6	1059	**Bushing**—P.T.O. Shaft in Valve Chamber	1	
7	1135	**Base Assembly**—Hydraulic Pump, comprising items 8, 9, 10, 12, 14 and 15	1	
8	8505	**Base**—Not serviced separately, order 1135		
9	1189	**Dowel**—Pump Body to Valve Chamber	2	
10	4327	**Bushing**—Valve	1	
11	1292	**Steady**—Piston	2	
12	1017	**Gasket**—Drain Plug	2	
	1144	**Plug**—Drain	2	
13	44CBH150	**Bolt**—Pump to Centre Housing	9	
	1576	**Washer**—Pump to Centre Housing	9	
14	1170	**Gasket**—Transmission Drain Plug	1	
15	1018	**Plug**—Transmission Drain	1	
16	1053	**Valve Assembly**—Control	1	
	1050	**Spring**	1	
	1054	**Clip**	1	
	1055	**Stem**	1	
	1056	**Bar**	1	
17	1800	**Valve Assembly**—Safety	1	
	1798	**Pad**—Valve Ball. Not Illustrated	1	
	1801	**Retainer**—Valve	1	
18	4082	**Gasket**—Pump Base to Centre Housing	1	
19	2181	**Gasket**—Valve Chamber to Base	2	
20	1150	**Plug**—Pipe—Extension Head	4	

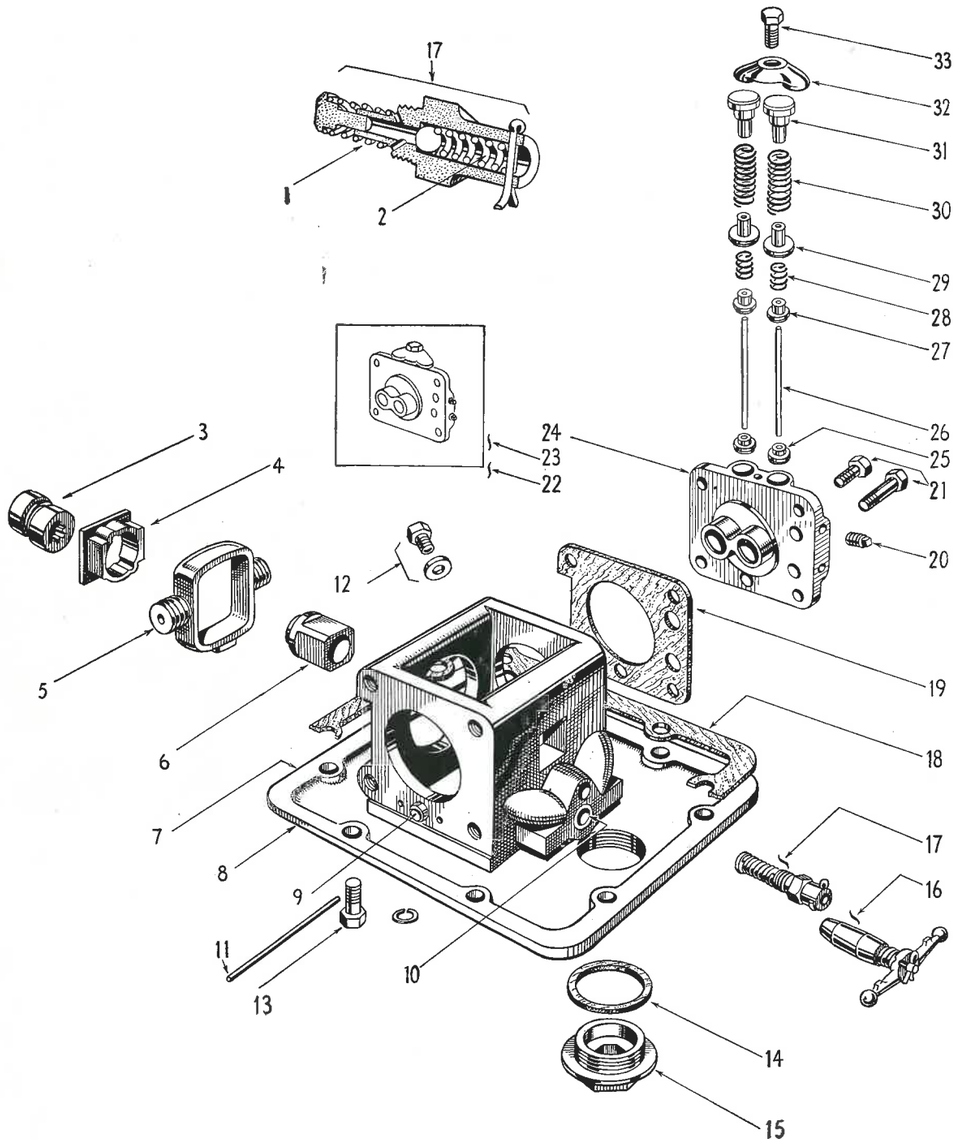

FIG. 4

Ref. No.	Part No.	Description	No. Off	Remarks
21	1484	**Bolt**—Valve Chamber to Base	4	
	44FBH162	**Bolt**—Valve Chamber to Base	4	
22	1137	**Valve Chamber Assembly** L.H. Comprising items 25 through 33 and 4011	1	
23	1136	**Valve Chamber Assembly** R.H. Comprising items 25 through 33 and 4010	1	
24	4010	**Valve Chamber** R.H. Not serviced separately. Order 1136		
	4011	**Valve Chamber** L.H. Not serviced separately. Order 1137		
25	1046	**Socket**—Valve Guide	4	
26	1045	**Guide**—Valve. Not serviced separately. Order 1565 ...		
27	1048	**Valve**—Inlet. Not serviced separately. Order 1565 ...		
28	1102	**Spring**—Inlet Valve.	4	
29	1047	**Valve**—Outlet ... Not serviced separately. Order 1565		
30	1101	**Spring**—Outlet Valve	4	
31	1051	**Plug**—Valve Chamber	4	
32	1040	**Clamp**—Top	2	
33	44CBH138	**Bolt**—Clamp to Valve Chamber	2	
	1565	**Guides and Valves Assembly**—Comprising items 26, 27 and 29	4	

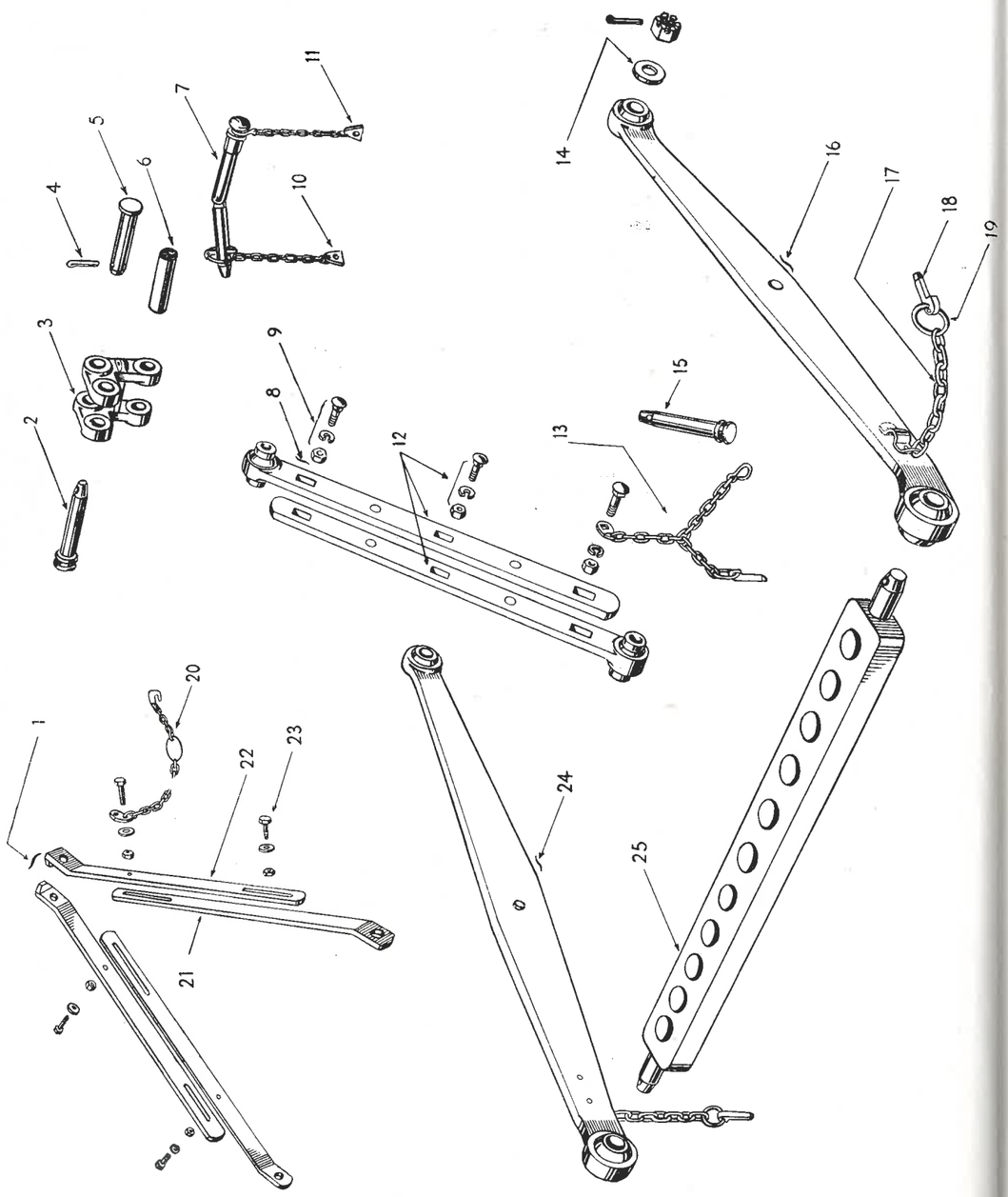

FIG. 5

Ref. No.	Part No.	Description	No. Off	Remarks
		FIG. 5 UPPER AND LOWER LINKS AND RELATED PARTS		
1	7011	**Stay**—Draw Bar assembly—R.H.	1	Not serviced as an assy. Order items 20, 21, 22 and 23
	7012	**Stay**—Draw Bar assembly—L.H.	1	
2	1023	**Pin**—Upper Link to Rocker	1	
3	2182	**Rocker**—Including Bush—see 6	1	
4	16PC125	**Pin**—Cotter	1	
5	75PS290	**Pin**—Clevis—Yoke to Rocker	1	
6	1240	**Bush**—Rocker Pin	1	
7	4114	**Pin Assembly** for Rocker	1	
8	7047	**Link** and **Ball Assembly**	2	
9	1184	**Bolt**—Hydraulic Lift Upper Link	3	
	1400	**Nut**—Hydraulic Lift Upper Link	3	
	1402	**Washer**—Hydraulic Lift Upper Link	3	
10	1934	**Linch Pin and Chain Assembly**	1	
11	1935	**Chain Assembly**—Upper Link Pin (Front)	1	
12	7065	**Link assembly**—Upper—composed of items 8, 9 and 13	1	
13	1028	**Chain, Anchor** and **Upper Linch Pin Assembly** ...	1	
14	1151	**Nut**—Lower Link to Axle Housing	2	
	12PC100	**Pin**—Cotter	2	
	62WFH	**Washer**—Flat—Heavy	2	
15	1023	**Pin**—Link to Implement	1	
16	8501	**Link Assembly**—Lower R.H. includes item 17	1	
	19RB93	**Rivet**—Clip to Lower Links	2	
17	1032	**Clip** and **Chain Assembly.** Includes items 18 and 19 ...	2	
18	1027	**Pin**—Linch...	2	
19	1012	**Ring**—Linch Pin	2	
20	1061	**Chain Assembly**—Drawbar—see item 1	1	
21	7092	**Stay**—Drawbar—lower—see item 1	2	
22	7091	**Stay**—Drawbar—upper—see item 1	2	
23	44FBH112	**Bolt**—Draw-bar—see item 1	4	
	44FNH	**Nut**—Draw-bar	4	
	44WF	**Washer**—Draw-bar	7	
24	8502	**Link assembly**—Lower L.H. Includes item 17	1	
	19RB93	**Rivet**—Clip to Lower Links	2	
25	7046	**Bar-Draw**	1	

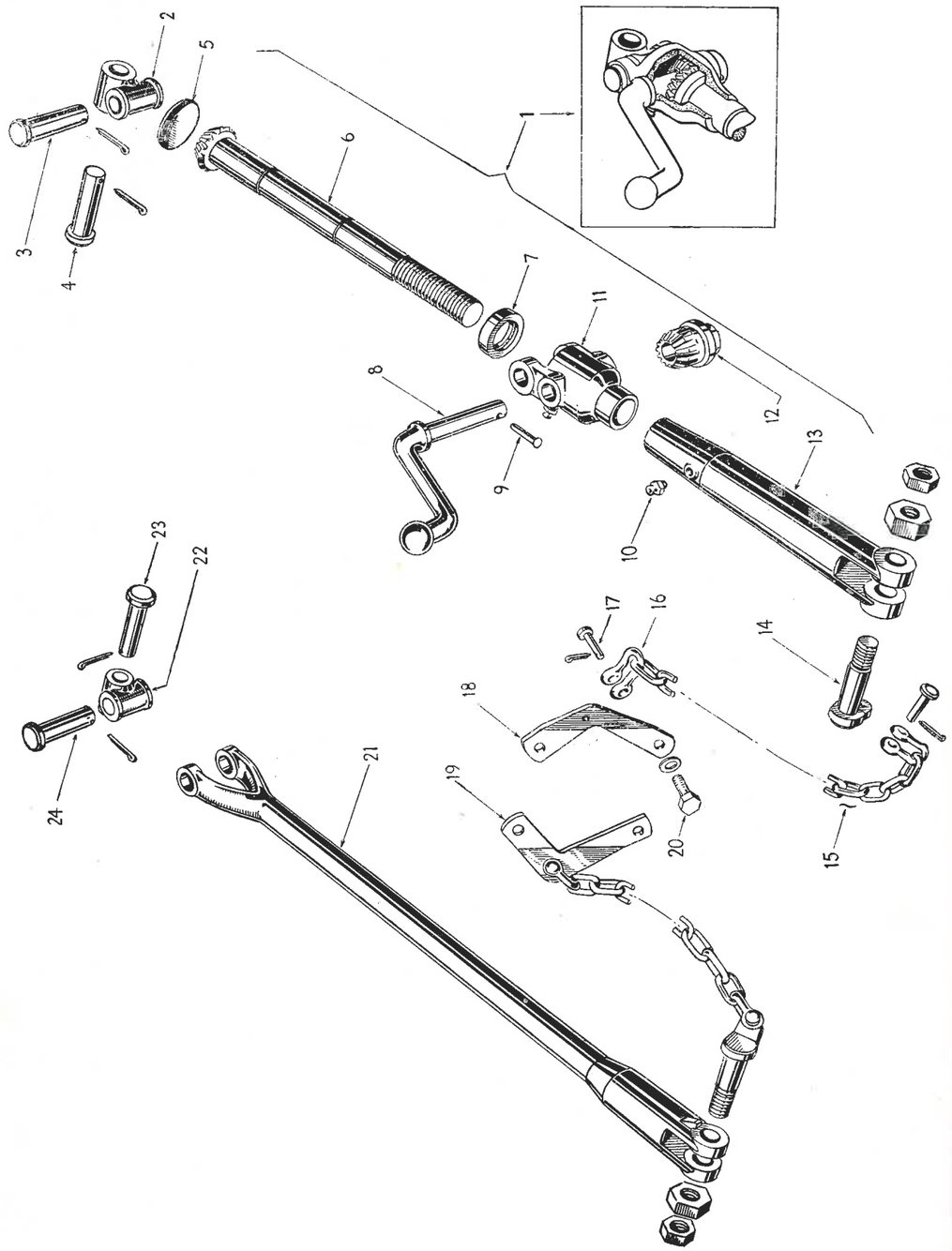

FIG. 6

Ref. No.	Part No.	Description	No. Off	Remarks
		FIG. 6 LEVELLING BOX ASSEMBLY and RELATED PARTS		
1	4002	**Levelling Box Assembly**—Comprising items 2, 3, 4 and 5 through 13	1	
2	1015	**Knuckle**—Levelling Box to Hydraulic Lift Arm	1	
3 & 4	1036	**Pin**—Knuckle to Levelling Box	2	
	12PC100	**Pin**—Cotter	2	
5	1155	**Plug**—Expansion 1¾"	1	
6	4018	**Shaft**—Levelling Box. Not serviced. Order 1925 Assy....		1st 8,700 Tractors only
	4297	**Shaft**—Levelling Box. Not serviced. Order 1925 Assy....	1	Tractors 8,701 & subs.
7	1022	**Bearing Assembly**—Levelling Box	1	
8	4078	**Lever**—Levelling	1	
9	19RC94	**Rivet**—Levelling Lever to Box	1	
10	25SLF	**Fitting**—Lubricator	2	
11	4007	**Box**—Levelling Gear	1	
12	1070	**Gear**—Levelling Lever. Not serviced. Order 1925 Assy....		1st 8,700 Tractors only
	1905	**Gear**—Levelling Lever. Not serviced. Order 1925 Assy....	1	Tractors 8,701 & subs.
13	4008	**Fork**—Lift Rod R.H.	1	
14	1033	**Bolt**—Eye—Check Chain	2	
	1164	**Nut**—Check	2	
	44FNH	**Nut**	2	
15	1072	**Chain**	2	
16	1071	**Clevis**	4	
17	31PS106	**Pin**—Clevis	4	
	09PC62	**Pin**—Cotter	4	
18	1827	**Anchor**—Lower Link Check Chain R.H.	1	
19	1828	**Anchor**—Lower Link Check Chain L.H.	1	
20	44CBH138	**Bolt**—Anchor to Centre Housing	4	1st 23,937 Tractors only
	44WL	**Washer**—Lock—Anchor to Centre Housing Bolt ...	4	
	44FNH	**Nut**—Hex.	4	Tractor No. 23,938
	44WF	**Washer**—Flat	4	and Subs.
21	8521	**Rod**—Levelling—L.H.	1	
22	1015	**Knuckle**—Rod to Lift Arm	1	
23-24	1036	**Pin**—Knuckle to Levelling Rod	2	
	12PC100	**Pin**—Cotter—Knuckle to Levelling Rod	2	
	1925	**Shaft** and **Gear Assembly**—Comprising 1905 and 4297 ...	1	

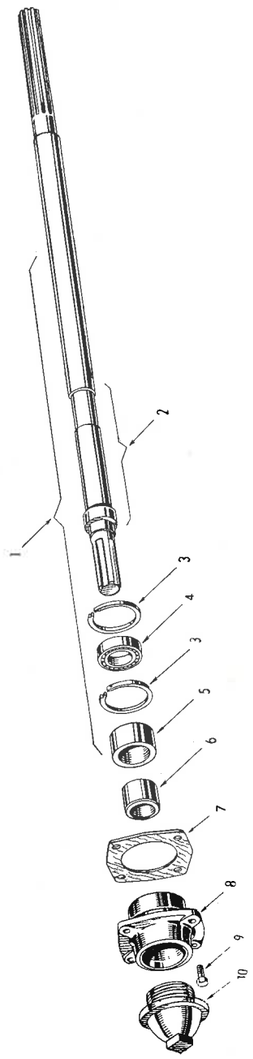

FIG. 7

Ref. No.	Part No.	Description	No. Off	Remarks
		FIG. 7 POWER TAKE OFF ASSEMBLY		
1	7058	**Driver Attachment Assembly P.T.O. Front and Rear—** Comprising Items 2 through 10	1	
2	7009	**Shaft Assembly** ... ... **comprising :—**	1	
	8544	**Shaft**—Not serviced separately		
	1188	**Sleeve**—Not serviced separately		
3	1134	**Ring P.T.O.**—Bearing Snap	2	
4	1109	**Bearing—P.T.O.**—Attachment	1	
5	1190	**Seal**—Bearing	1	
6	1191	**Sleeve**	1	
7	1075	**Gasket**—Cover	1	
8	4059	**Cover**—P.T.O. Shaft Assembly	1	
9	44CBH112	**Bolt**—Cover to Centre Housing	4	
10	1105	**Cap**—Cover	1	
	2177	**Circlip**—Sleeve. Not Illustrated.	1	

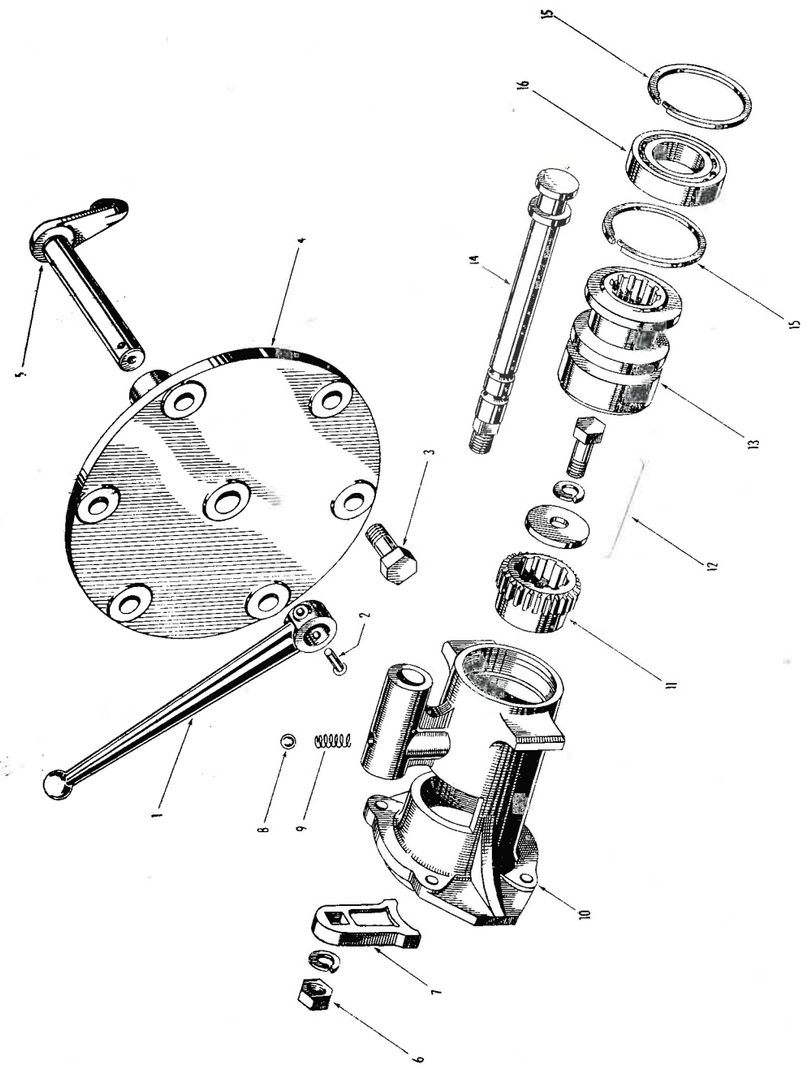

FIG. 8

Ref. No.	Part No.	Description	No. Off	Remarks
		FIG. 8 HYDRAULIC P.T.O. SHIFTER LEVER, FORK and RELATED PARTS		
1	1106	**Lever**—Shifter	1	
2	25RB125	**Rivet**—Shifter Lever to Fork	1	
3	44CBH75	**Bolt**—Shifter Cover to Housing	6	
4	7063	**Cover**—Shifter	1	
5	1104	**Fork**—Shifter	1	
6	38WL	**Washer-lock**—Shifter Rail P.T.O.	1	
	38FNH	**Nut**—Shifter Rail P.T.O.	1	
7	1103	**Stop**—Shifter Rail	1	
8	1196	**Ball**—Shifter Rail Mesh Spring	1	
9	1226	**Spring**—Shifter Rail Mesh	1	
10	7043	**Support**—Shaft Bearing	1	
11	1100	**Hub**—Clutch	1	
12	38FBH100	**Bolt**—Clutch Hub to Transmission	1	
	38WL	**Washer**—Lock—Clutch Hub Bolt	1	
	1243	**Washer**—Clutch Hub Bolt	1	
13	4058	**Sleeve**—Clutch	1	
14	1192	**Rail**—Shifter	1	
15	1134	**Ring**—Snap—Bearing	2	
16	1109	**Bearing Assembly**	1	

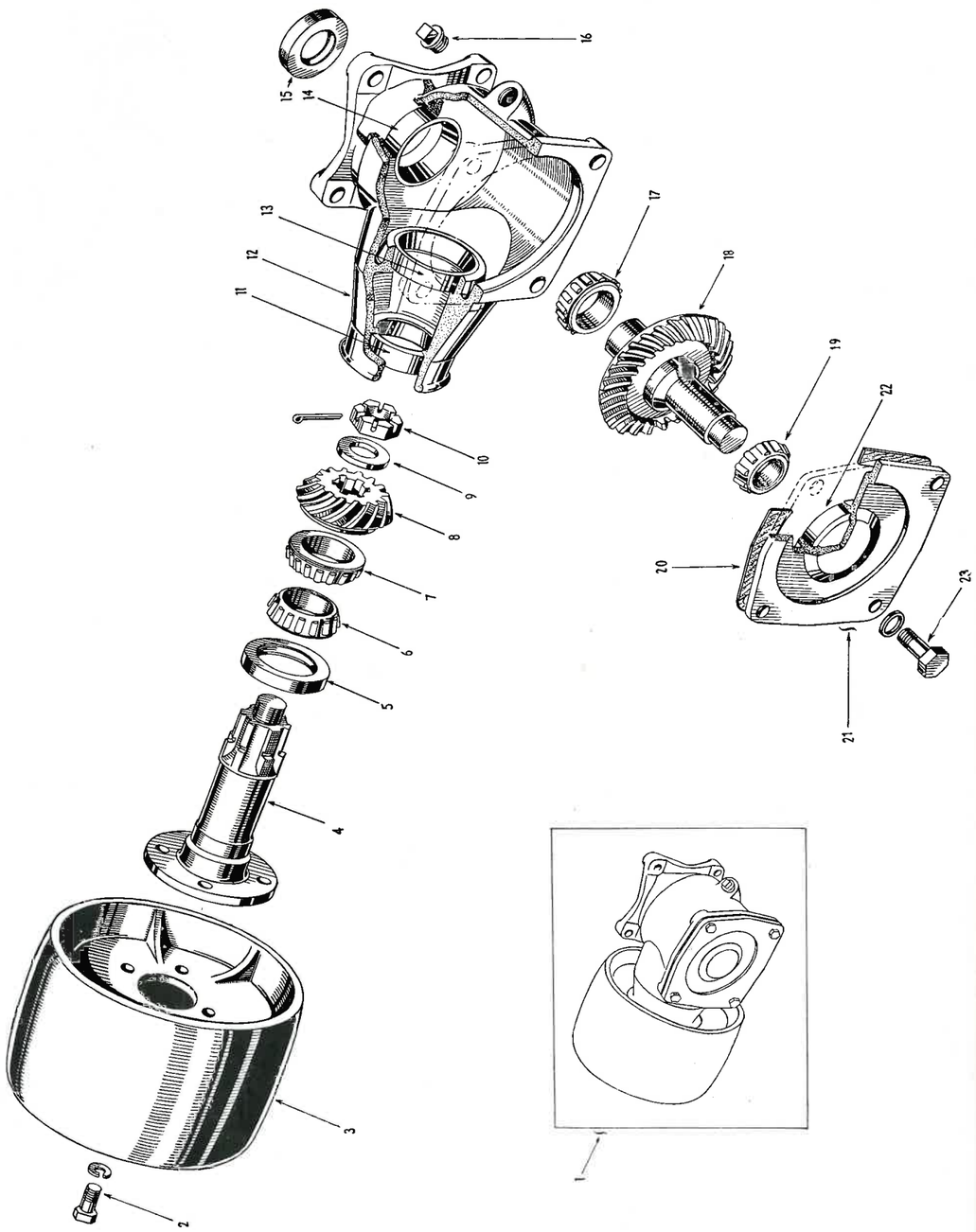

FIG. 9

Ref. No.	Part No.	Description	No. Off	Remarks
		FIG. 9 PULLEY ATTACHMENT ASSEMBLY (Accessory to the Tractor).		
1	1193	**Pulley Attachment Assembly** ... ... Comprising Items 2 through 23	1	
2	44FBH88	**Bolt**—Pulley to Shaft	4	
	44WL	**Washer**—Lock—Pulley to Shaft bolt	4	
3	7057	**Pulley Assembly**—P.T.O.	1	
4	4060	**Shaft**—Pulley	1	
5	1195	**Seal**—Oil	1	
6	4062	**Cone and Roller**—Pulley Shaft to Housing. Not Serviced Separately Order 4061 Bearing Assembly		
7	4062	**Cone and Roller**—Driven Gear. Not Serviced Separately Order 4061 Bearing Assembly		
8	4296	**Gear**—Driven—Not serviced separately—matched with item 18. Order 1918 Assembly		
9	62WFH	**Washer**—Driven Gear to Shaft	1	
10	1993	**Nut**—Driven Gear to Shaft	1	
	09PC138	**Pin**—Cotter	1	
11	4063	**Cup**—Bearing—Pulley Shaft. Not Serviced Separately Order 4061 Bearing Assembly		
12	8527	**Housing**—P.T.O....	1	
13	4063	**Cup**—Bearing—Driven Gear. Not Serviced Separately Order 4061 Bearing Assembly		
14	4063	**Cup**—Bearing—Drive Gear. Not Serviced Separately Order 4061 Bearing Assembly		
15	1194	**Seal**—Oil	1	
16	1199	**Plug**—Oil Drain	1	
17	4062	**Cone and Roller**—Drive Gear. Not Serviced Separately Order 4061 Bearing Assembly		
18	4298	**Gear**—Shaft—Drive—Not serviced separately—matched with item 8. Order 1918 Assembly		
19	4065	**Cone and Roller**—P.T.O. Pilot Gear. Not Serviced Separately Order 4064 Bearing Assembly		

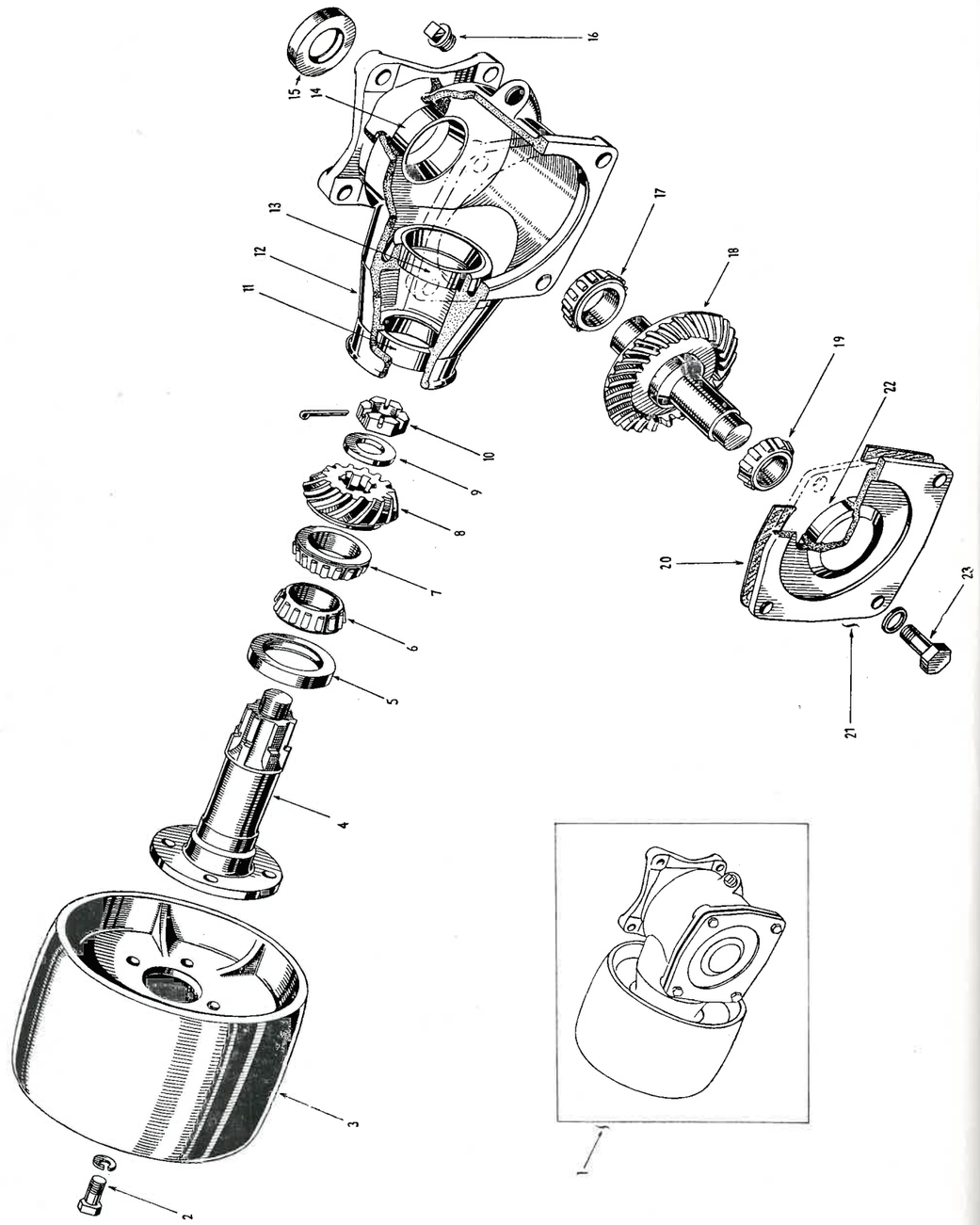

FIG. 9

Ref. No.	Part No.	Description	No. Off	Remarks
20	4103	**Gasket** .020 to .023	as req.	
	4104	**Gasket** .016 to .019 } P.T.O. Housing Cover	as req.	
	4105	**Gasket** .012 to .015	as req.	
21	4102	**Cover**—P.T.O.	1	
22	4066	**Cup—Bearing**—P.T.O. Pilot Gear. Not Serviced Separately Order 4064 Bearing Assembly		
23	44CBH112	**Bolt**—Cover to Housing	4	
	44WL	**Washer**—Lock—Cover to Housing Bolt	4	
	4061	**Bearing Assembly**	3	
	4064	**Bearing Assembly**	1	
	1918	**Gear Assembly**—Matched	1	

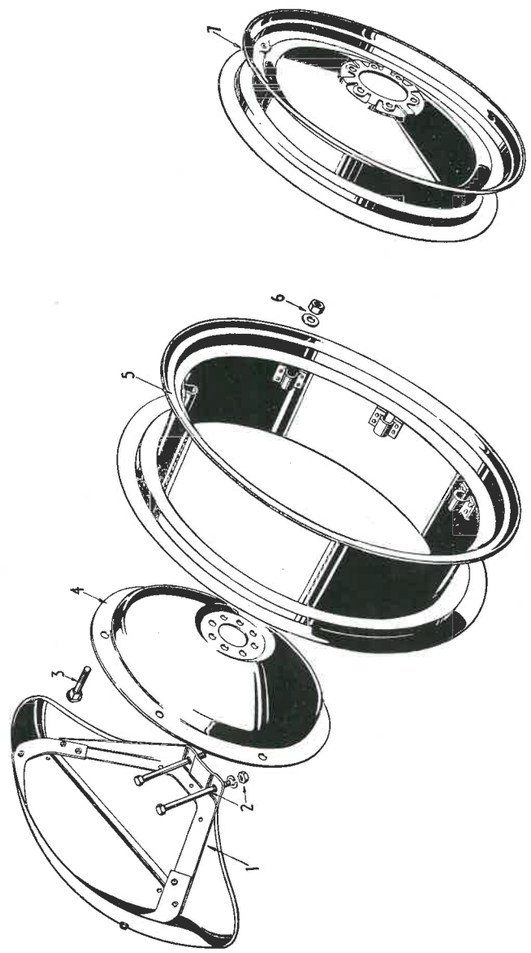

FIG. 10

Ref. No.	Part No.	Description	No. Off	Remarks
		FIG. 10 WHEELS AND FENDERS		
1	8520	**Fender Assembly**	2	
2	62FBH556	**Bolt**—Fender to Axle Housing	4	
	62FNH	**Nut**	4	
	62WL	**Washer**	4	
3	1385	**Bolt—Rim to Disc**—Rear Wheel	12	
	2184	**Bolt—Rim to Disc**—(for use when a longer bolt is required)	12	
4	9553	**Disc**—Rear Wheel—Tapered	2	Alternatives.
	9554	**Disc**—Rear Wheel—Plain	2	
5	9552	**Rim**—Rear Wheel	2	
6	62FNH	**Nut—Rim to Disc**—Rear Wheel	12	
	62WFH	**Washer**	12	
7	8528	**Wheel**—Front	2	Alternatives.
	8630	**Wheel**—Front—Scalloped centre	2	

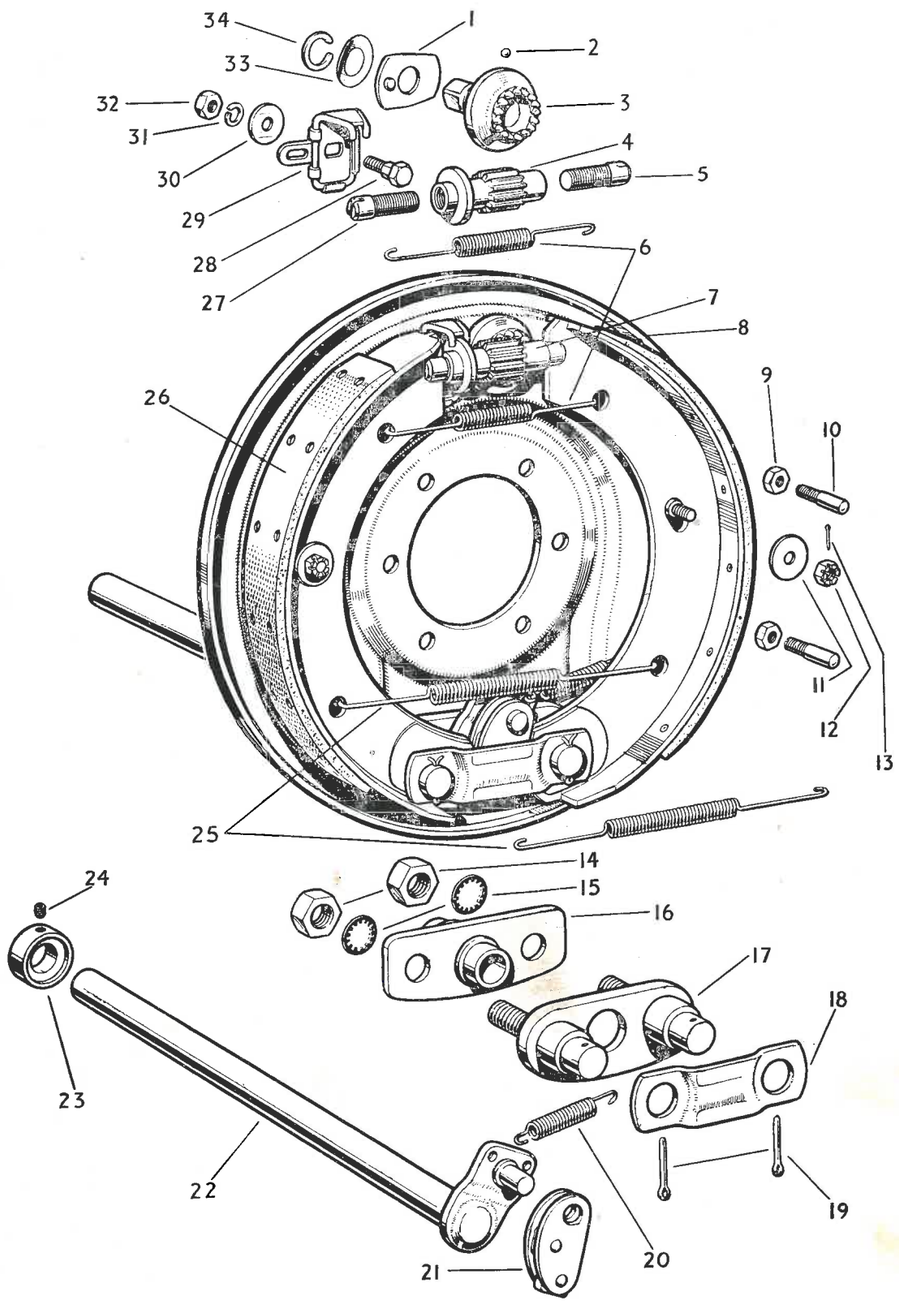

FIG. 11

Ref. No.	Part No.	Description	No. Off	Remarks
		FIG. 11 BRAKE ASSEMBLY		
	9525	**Brake Assembly**—L.H.	1	
	9526	**Brake Assembly**—R.H.—Comprising items 1 through 34...	1	
1	1539	**Retainer**—Crown Wheel Ball	2	
2	1538	**Ball**—Crown Wheel	2	
3	1537	**Wheel**—Crown	2	
4	1520	**Pinion**—Adjuster...	2	
5	1521	**Screw**—Adjuster L.H.	2	
6	4188	**Spring**—Adjuster Screw	2	
7	1519	**Adjuster Assembly**—Comprising items 4, 5 and 27 ...	2	
8	8578	**Plate-Back** L.H.	1	
	8579	**Plate-Back** R.H.	1	
9	1529	**Nut**—Back Plate Steady Post	8	
10	1528	**Post**—Steady—Back Plate	8	
11	1542	**Washer**—Spacer Pin	4	
12	1999	**Nut**—" Simmonds " Spacer Pin	4	
13	06PC75	**Cotter**—Spacer Pin (not required when 1999 is fitted) ...	4	
14	1523	**Nut**—Anchor Pin	4	
15	1525	**Washer**—Lock—Anchor Pin	4	
16	4187	**Bearing**—Control Shaft	2	
17	4183	**Pin** and **Plate Assembly**—Anchor	2	
18	1527	**Strut**—Anchor Pin	2	
19	1526	**Pin**—Cotter—Anchor Pin	4	
20	4189	**Spring**—Crank Lever Return	2	
21	1530	**Plate** and **Block Assembly**—Cam	2	
22	4186	**Shaft** and **Crank Assembly**—Control	2	
23	1535	**Collar**—Control Shaft	2	
24	1536	**Screw Set**—Control Shaft Collar	2	

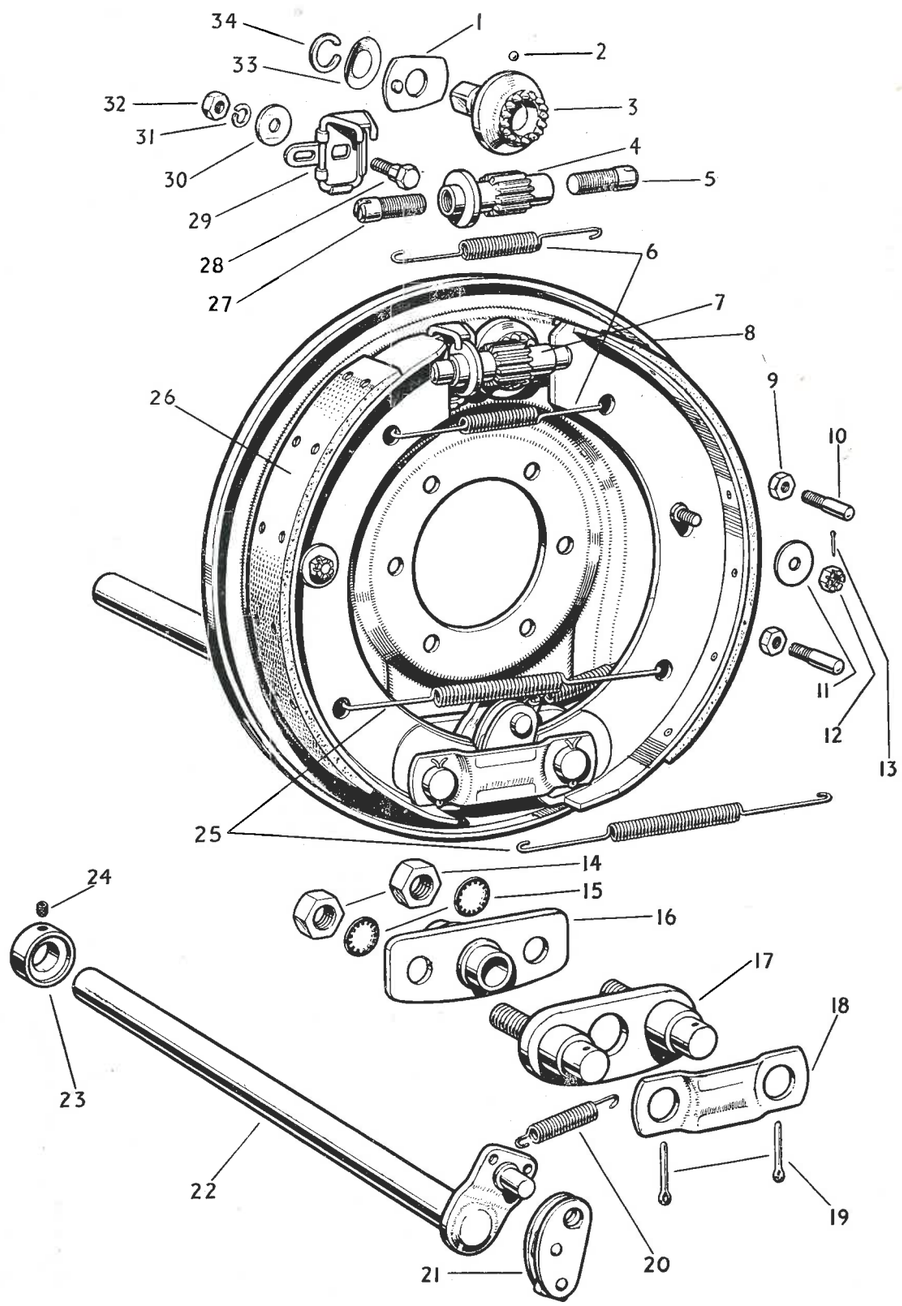

FIG. 11

Ref. No.	Part No.	Description	No. Off	Remarks
25	1544	**Spring**—Primary—Secondary	2	
26	7118	**Shoe** and **Lining Assembly** (Pair)	2	
27	1522	**Screw**—Adjuster—R.H.	2	
28	1531	**Bolt**—Centraliser	2	
29	4184	**Centraliser** L.H.	1	
	4185	**Centraliser** R.H....	1	
30	1532	**Washer**—Centraliser	2	
31	1533	**Washer**—Lock—Centraliser	2	
32	1534	**Nut**—Centraliser	2	
33	1540	**Washer**—Lock—Crown Wheel	2	
34	1541	**Ring**—Lock—Crown Wheel	2	

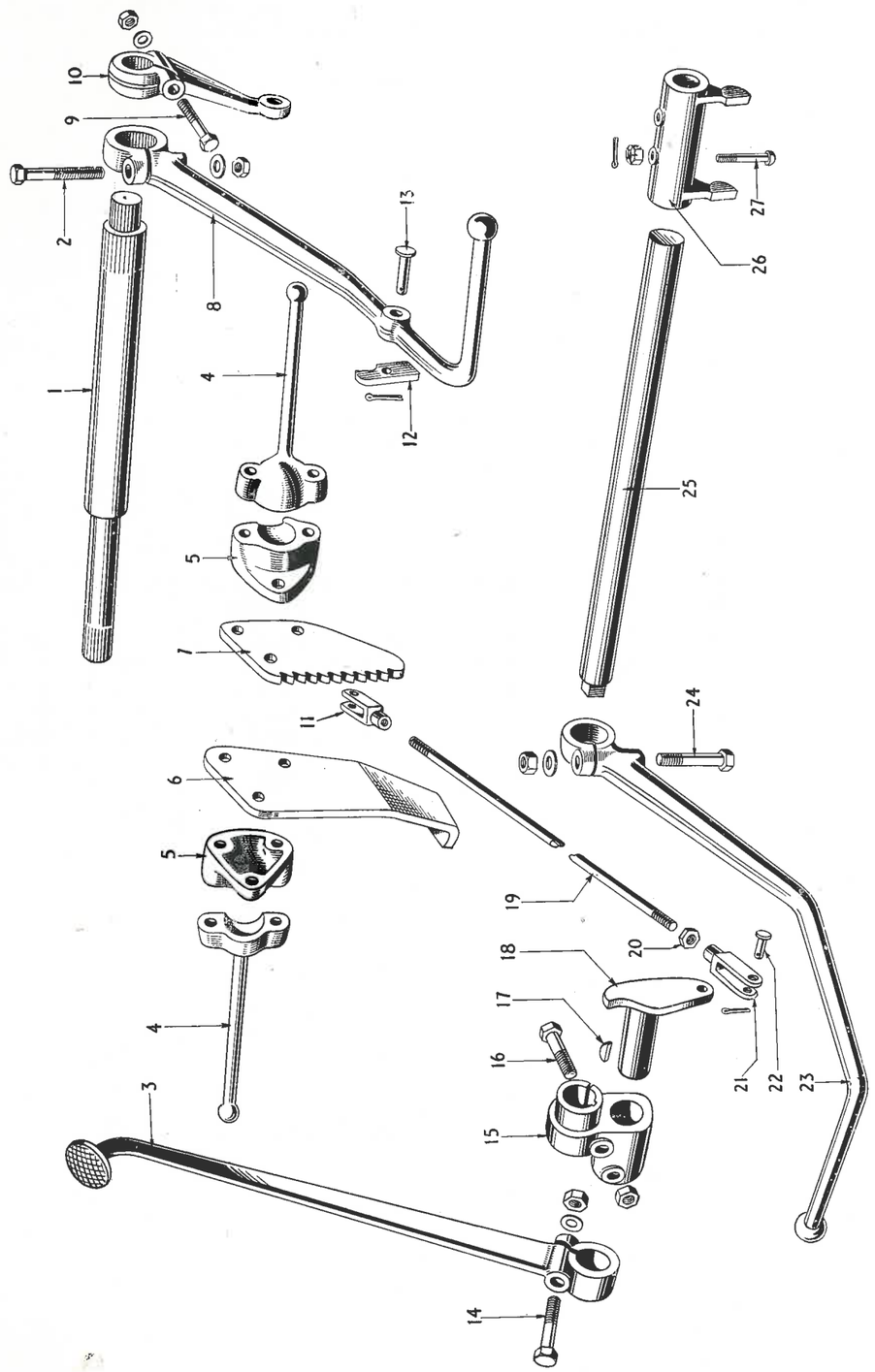

FIG. 12

Ref. No.	Part No.	Description	No. Off	Remarks
		FIG. 12 BRAKE RODS, PEDALS AND RELATED PARTS		
1	4305	**Shaft**—Brake Cross	1	
	1826	**Washer**—L.H.	1	Use with Elektron
	1825	**Washer**—R.H.	1	Transmission Housing
2	44CBH250	**Bolt**—Combined Brake Pedal	1	
	44CNH	**Nut**	1	
	44WF	**Washer**	1	
3	4352	**Pedal Assembly**—Brake L.H.	1	
	4351	**Pedal Assembly**—Brake R.H.	1	
4	4120	**Cap**—Radius Rod Ball	2	
5	4118	**Spacer**—Radius Rod Ball	2	
6	4266	**Stop**—Clutch Pedal	1	
7	4145	**Sector**—Pawl—Combined Brake	1	
8	7097	**Pedal**—Combined Brake	1	
9	44CBH200	**Bolt**—Combined Brake Arm	2	Use with Part
	44CNH	**Nut**	2	Numbers 4178 and
	44WF	**Washer**	2	4179 only
	31CBH188	**Bolt**—Combined Brake Arm	2	Use with Part Nos.
	31CNH	**Nut**	2	4269 and 4270 only
	31WF	**Washer**	2	
10	4269	**Arm**—Combined Brake L.H.	1	
	4270	,, ,, ,, R.H.	1	
11	1317	**Fork End**—Brake Rod	2	
12	1312	**Pawl**—Combined Brake	1	
13	31PS106	**Pin**—Clevis—Brake Pawl	1	
	09PC50	**Pin**—Cotter	1	
14	44CBH206	**Bolt**—Brake Pedal R.H. and L.H.	2	
	44CNH	**Nut**	2	
	44WF	**Washer**	2	
15	1821	**Linkage**—Brake L.H.	1	
	1822	**Linkage**—Brake R.H.	1	
	1309	**Bush**—Brake Linkage	2	
16	44CBH225	**Bolt**—Brake Linkage	2	
	44CNH	**Nut**	2	
	44WF	**Washer**	2	
17	1343	**Key**—Woodruff No. 11	2	

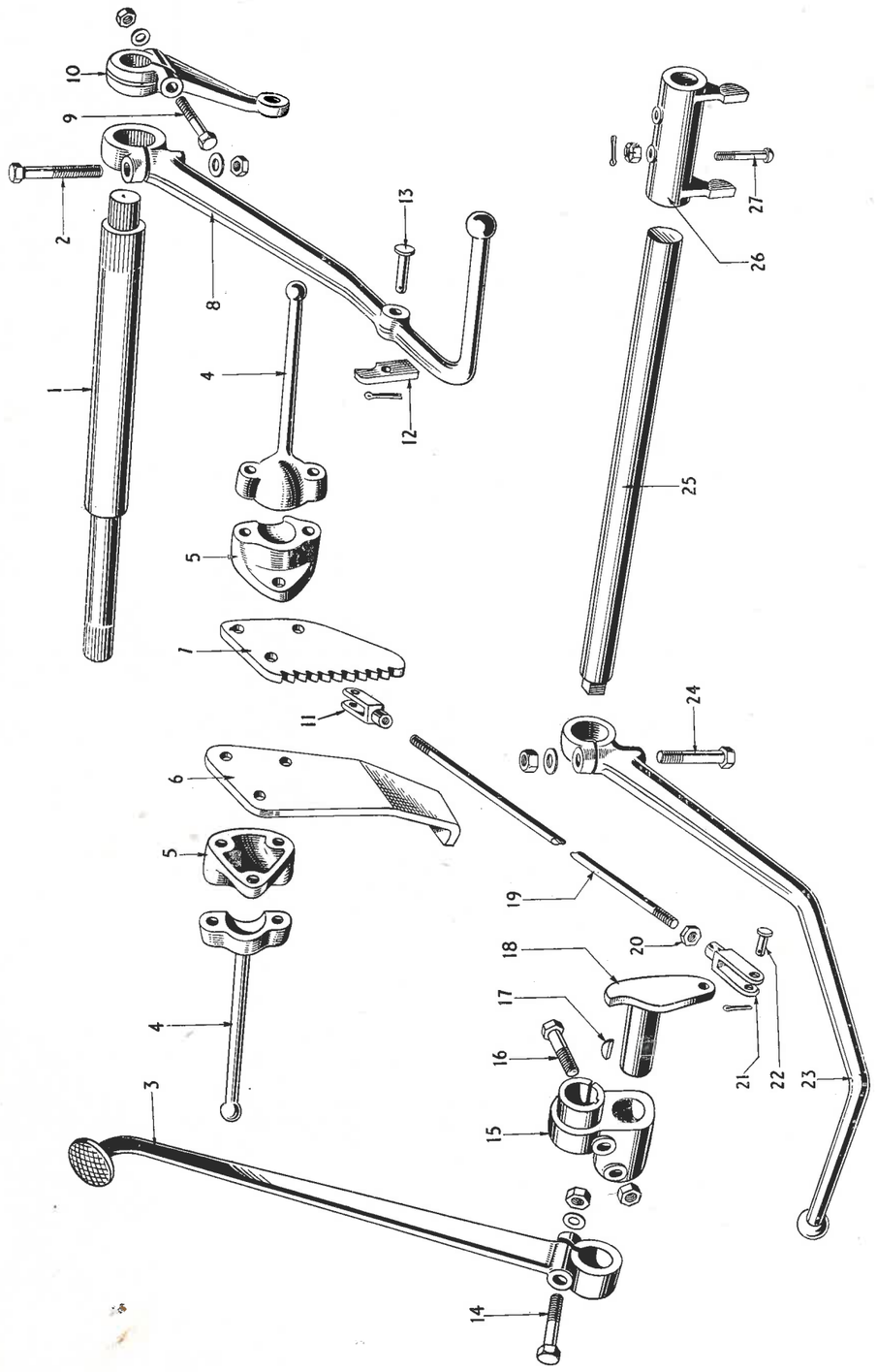

FIG. 12

Ref. No.	Part No.	Description	No. Off	Remarks
18	1515	**Stop Assembly**—L.H.	1	
	1516	" " —R.H.	1	
19	1316	**Rod**—Brake	2	First 2,500 Tractors
	1518	" "	2	Tractor 2,501 & subs.
20	38CNHJ	**Nut**—Lock	2	
21	1488	**Fork End**—Brake Rod	2	
22	1975	**Pin**—Clevis	4	
	09PC75	**Pin**—Cotter	4	
23	7154	**Pedal**—Clutch	1	
24	44CBH250	**Bolt**—Clutch Pedal	1	
	44CNH	**Nut**	1	
	44WL	**Washer**	1	
25	1303	**Shaft**—Clutch Release	1	
26	4127	**Fork**—Clutch Shaft	1	
27	25FSR175TD	**Screw**—Clutch Shaft Fork	2	
	25FNT	**Nut**	2	
	06PC62	**Pin**—Cotter	2	

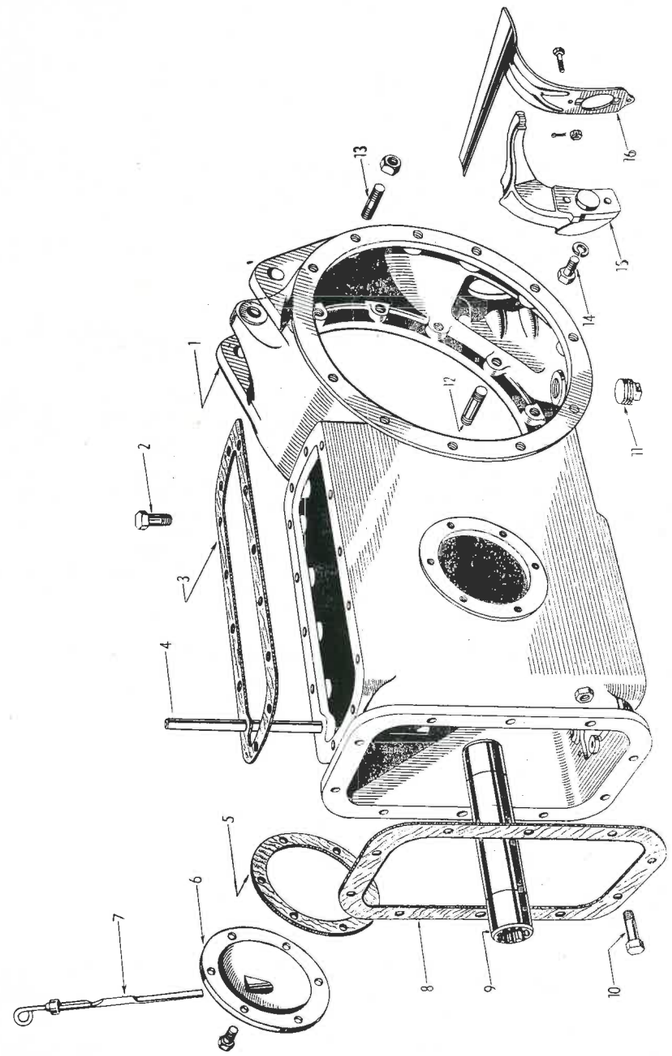

FIG. 13

Ref. No.	Part No.	Description	No. Off	Remarks
		FIG. 13 CENTRE AXLE HOUSING and RELATED PARTS		
1	9516	**Housing Assembly**—Centre—Rear Axle	1	
2	44CBH250	**Bolt**—Hydraulic Lift Cover	3	
	44CBH150	**Bolt**	7	
	44CBH362	**Bolt**—Housing	4	
3	7042	**Gasket**—Hydraulic Lift Cover	1	
4	1026	**Tube**—Oil	1	
5	1077	**Gasket**—Side Cover—Centre	2	
6	4083	**Cover Assembly**—Centre Housing Side	1	
	44CBH75	**Bolt**—Side Cover...	6	
7	1139	**Indicator**—Oil Level	1	
8	7070	**Gasket**—Centre Housing to Trans. Housing	1	
9	4028	**Shaft**—Drive Assembly	1	
10	44FBH138	**Bolt**—Transmission Housing	9	1st 724 Tractors only
	44FNH	**Nut**	9	
	44CBH112	**Bolt**—Centre Housing	1	
	44FBH138	**Bolt**—Transmission Housing	8	725th Tractor and subs.
	44FNH	**Nut**	8	
	44CBH112	**Bolt**—Centre Housing	2	
11	1245	**Plug**—Drain—Centre Housing	1	
12	1505	**Stud**—Muffler Clamp to Centre Housing	1	
13	1249	**Stud**—Axle Shaft Housing to Centre Housing	19	
	44FNH	**Nut**—Axle Shaft Housing to Centre Housing	20	
14	38CBH100	**Bolt**—Thrust Block to Housing	2	
	38WL	**Washer**—Lock—Block to Housing	2	
15	7015	**Block**—Thrust—Driving Gear	1	
	1502	**Shim Thrust Block** .002	as req.	
	1503	" " " .003	as req.	
	1504	" " " .005	as req.	
16	4019	**Trough Assembly**—Diff. Bearing	1	
	25FBH138TD	**Bolt**—Trough to Housing	2	
	25FNT	**Nut**—Slotted	2	
	O6PC62	**Pin**—Cotter	2	
	1586	**Stud**—Anchor to Centre Housing—(use when fitting 1827 and 1828 Anchors)	4	

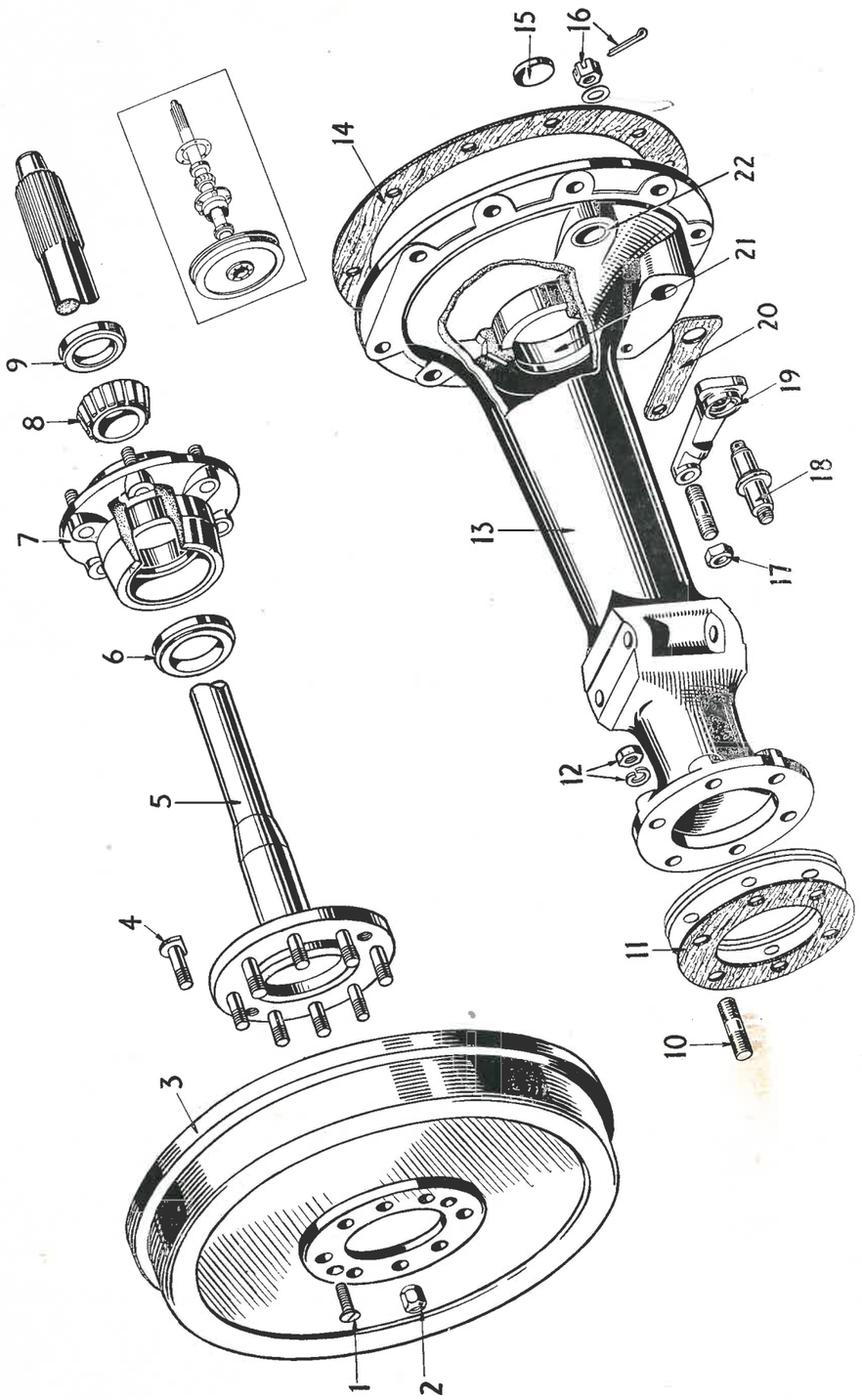

FIG. 14

Ref. No.	Part No.	Description	No. Off	Remarks
		FIG. 14 REAR AXLE HOUSING AND RELATED PARTS		
1	1310	**Screw**—Brake Drum	4	
2	1268	**Nut**—Wheel Stud—Rear	16	
3	8550	**Drum**—Brake	2	
4	1187	**Stud**—Wheel—Rear	16	
5	8623	**Shaft Assembly**—Rear Axle—Includes Item 4 and 1903 ...	2	
	1903	**Button**—Axle Shaft	2	
6	2171	**Seal**—Oil	2	
7	4115	**Retainer**—Rear Hub Bearing	2	
	4025	**Cup**—Bearing—Not serviced separately ... ... Order 4023 Bearing Assembly		
8	4024	**Cone** and **Roller**—Not serviced separately ... ... Order 4023 Bearing Assembly		
9	1174	**Collar**—Axle Shaft Bearing	2	
10	1885	**Stud**—Retainer to Axle Housing	12	
11	1076	**Gasket**—Housing—Outer	4	
	4099	**Shim** .003	as req.	
	4100	„ .005	as req.	
	4101	„ .010	as req.	
	4268	„ .028	as req.	
12	44FNH	**Nut**—Retainer to Housing Stud	12	
	44WL	**Washer**—Lock	12	
13	9512	**Housing**—Rear Axle L.H. **comprising :—**	1	
	9513	**Housing**—Not serviced separately		
	1289	**Bushing**—Brake Shaft—See Item 22	1	
	9514	**Housing**—Rear Axle—R.H. **comprising :—**	1	
	9515	**Housing**—Not serviced separately		
	1289	**Bushing**—Brake Shaft—See item 22	1	
	1185	**Plug**—Expansion—See item 15	1	
14	4112	**Gasket**—Housing—Inner	2	
15	1185	**Plug**—Expansion—See item 13	1	
16	1151	**Nut**—Lower Link Shaft	2	
	62WF	**Washer**—Flat	2	
	12PC100	**Pin**—Cotter	2	

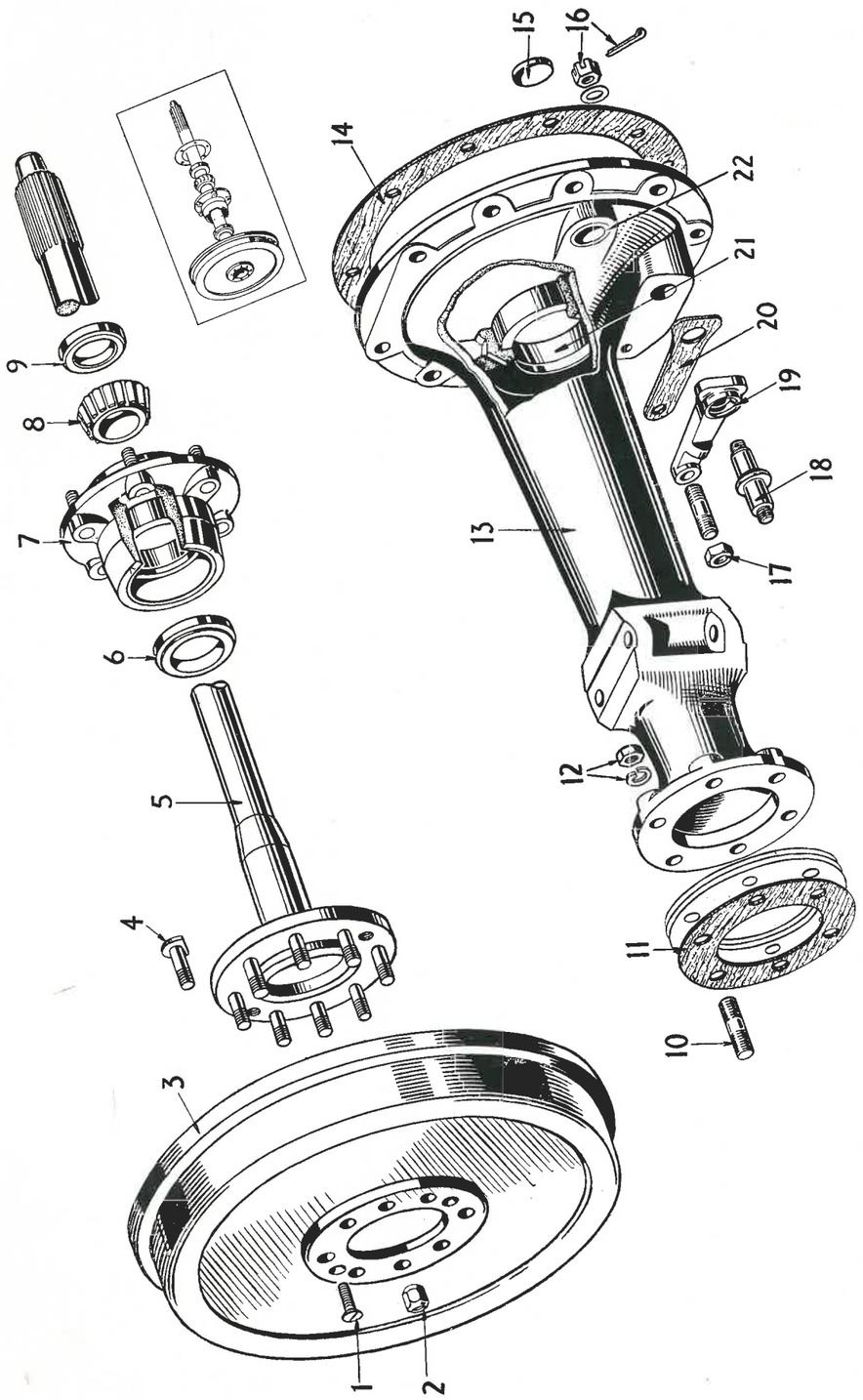

FIG. 14

Ref. No.	Part No.	Description	No. Off	Remarks
17	1145	**Stud**—Lower Plate	2	
	44FNH	**Nut**—Lower Plate	2	
18	1025	**Shaft**—Lower Link	2	
19	1024	**Plate**—Lower Link	2	
20	1011	**Gasket**—Lower Link Plate	2	
21	4081	**Cup**—Bearing—Not serviced separately. Order 4079 Bearing Assembly		
22	1289	**Bush**—Brake Shaft—See item 13	2	
	4023	**Bearing Assembly**	2	

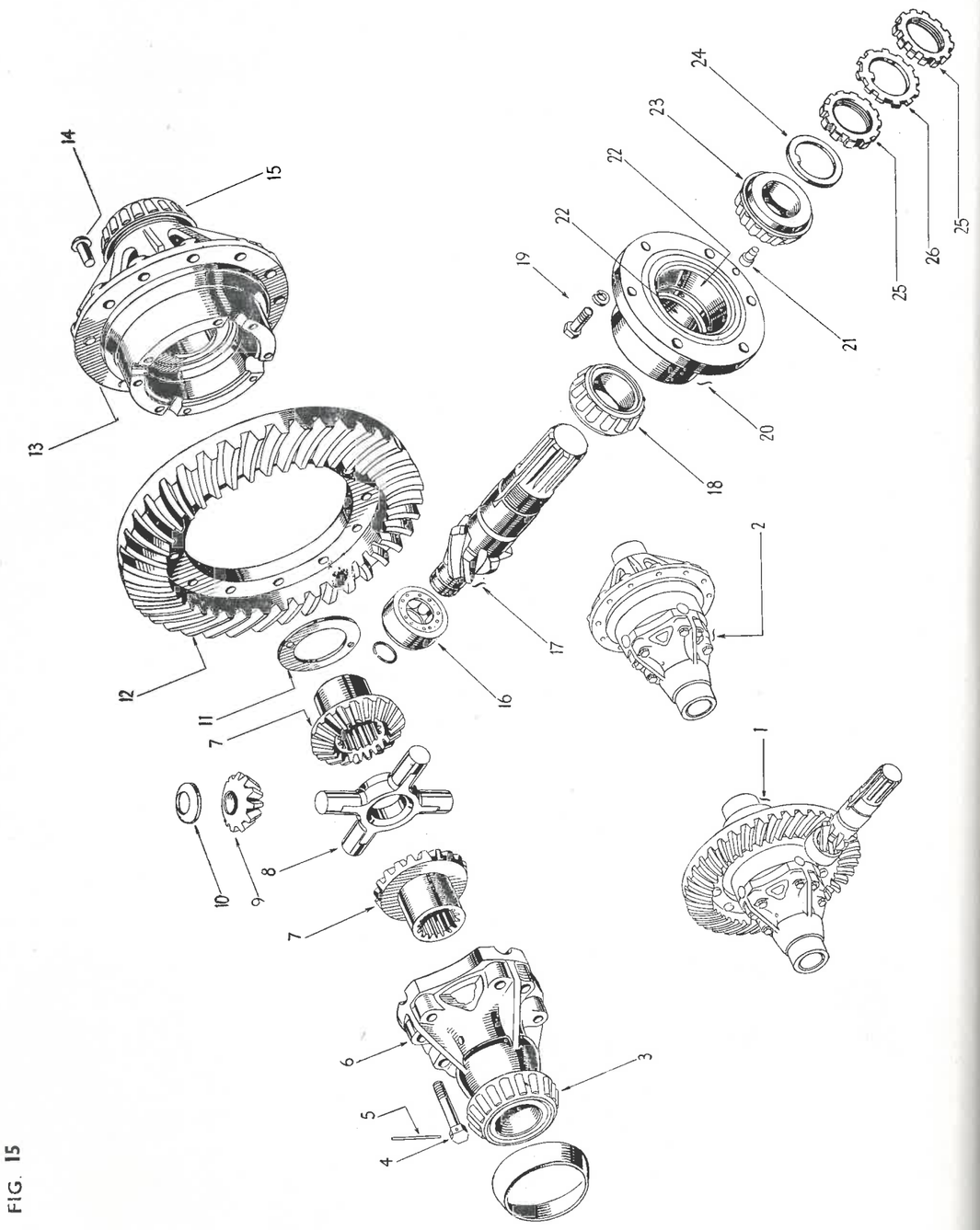

FIG. 15

Ref. No.	Part No.	Description	No. Off	Remarks
		FIG. 15 DIFFERENTIAL ASSEMBLY		
1	8576	**Case Gear and Pinion Assembly** ... ... Comprising items 6, 12, 13, 14, 16 and 17	1	
2	7114	**Case**—Differential ... ... Comprising items 6, 13 and 14	1	
3	4079 4080 4081	**Bearing Assembly comprising :—** ... ... **Cone** and **Roller**—Not serviced separately **Cup**—Not serviced separately	1	
4	1078	**Screw**—Diff. Gear Case	8	
5	1116	**Wire**—Locking—Not serviced separately		
6	8534	**Case**—Diff. R.H.—Not serviced separately—Order 7114		
7	7133	**Gear**—Differential. Use with 4206 only.	2	
8	4022	**Spider**—Differential	1	
9	4206	**Pinion**—Differential. Use with 7133 only	4	
10	1081	**Washer**—Thrust Diff. Pinion	4	
11	1079	**Washer**—Thrust Diff. Gear	2	
12	7019	**Crown Wheel**—Not serviced separately. Order 7113 or 1876		
13	8510	**Case**—Diff. L.H.—Not serviced separately. Order 7114		
14	1186	**Rivet**—Crown Wheel to Case	12	
15	4079 4080 4081	**Bearing Assembly comprising :—** ... ... **Cone** and **Roller**—Not serviced separately **Cup**—Not serviced separately	1	
16	1086 4034	**Lock Ring**—Pinion Pilot Bearing ... ... **Bearing**—Pinion Pilot—Includes Inner Sleeve 1085	1 1	
17	7022	**Pinion**—Driving—Not serviced separately. Order 7113 or 1876		
18	4033	**Cone** and **Roller**—Not serviced separately. Order 4031 Bearing Assembly		
19	56CBH125 56WL	**Bolt**—Driving Pinion Sleeve ... ... **Washer**—Lock	6 6	
20	2165 4030 4031	**Sleeve Assembly**—Driving Pinion—comprising ... ... **Sleeve**—Not serviced separately ... ... **Bearing Assembly**	1 2	

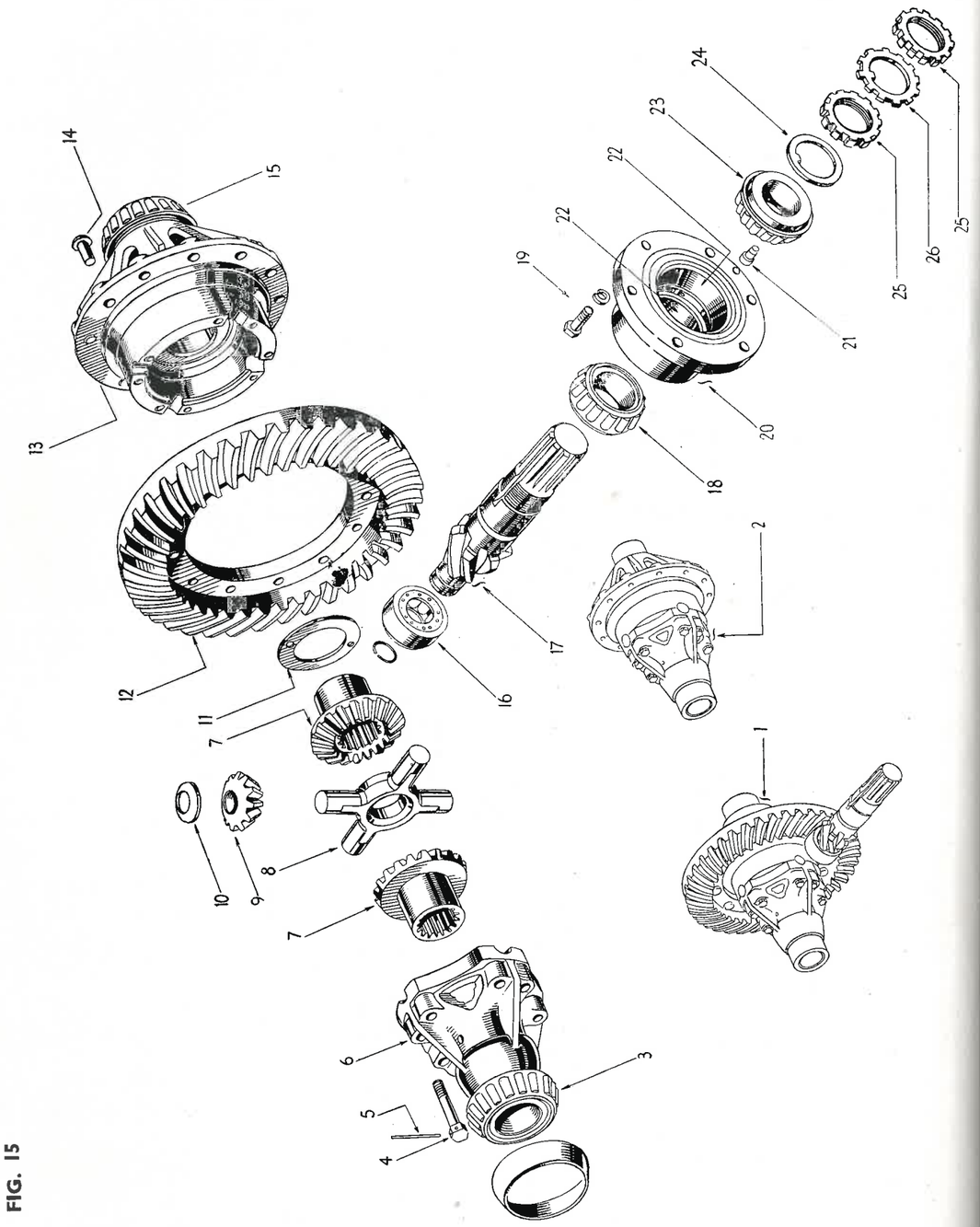

FIG. 15

Ref. No.	Part No.	Description	No. Off	Remarks
21	1142	**Pin**—Lock	1	
22	4032	**Cup**—Bearing—Not serviced separately. Order 4031 Bearing Assembly		
23	4033	**Cone** and **Roller**—Not serviced separately. Order 4031 Bearing Assembly		
24	1088	**Washer**—Thrust—Pinion Bearing	1	
25	1087	**Nut**—Lock—Pinion Bearing	2	
26	1229	**Washer**—Lock—Driving Pinion	1	
	7113	**Crown Wheel** and **Pinion** ... ... Comprising items 12, 14 and 17	1	
	1876	**Crown Wheel** and **Pinion** ... ... Comprising items 12, 14, 16 and 17	1	
	4031	**Bearing Assembly**—Driving Pinion	2	
	4137	**Shim**—.002″	as req.	
	4138	**Shim**—.003″	as req.	

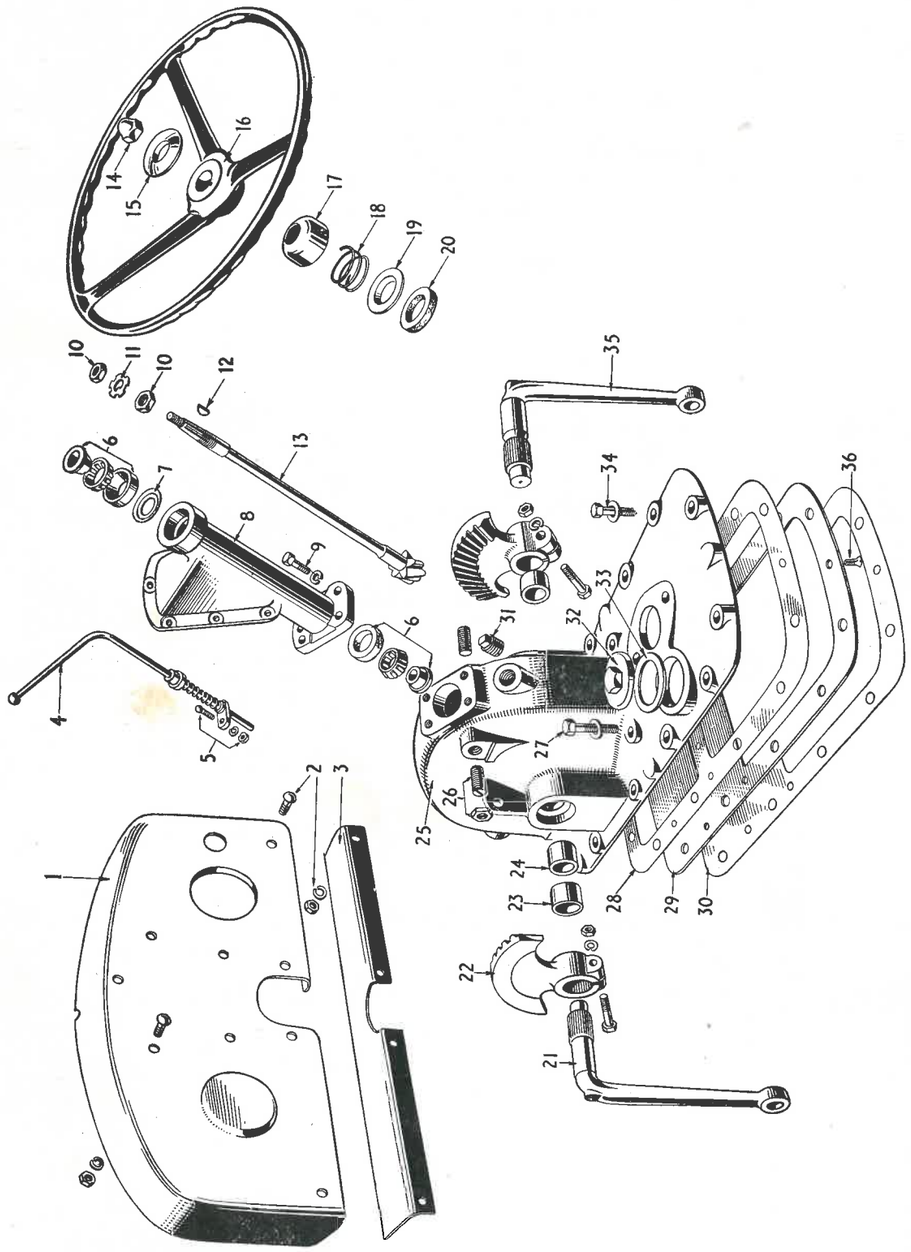

FIG. 16

Ref. No.	Part No.	Description	No. Off	Remarks
		FIG. 16 INSTRUMENT PANEL AND STEERING ASSY.		
1	2012	**Panel**—Instrument—complete with Seal and Lid	1	
	1944	**Seal**—Rubber—complete with 12 rivets	1	
2	31FBR68	**Bolt**—Carriage—Rib Neck	4	
	31FBR81	**Bolt**—Carriage—Rib Neck	3	
	31FBR62	**Bolt**—Carriage—Rib Neck	2	
	31WL	**Washer**—Lock	9	
	1416	**Washer**—Flat—Heavy—Not illustrated	2	
	31FNH	**Nut**—Hex.	9	
3	7093	**Support**—Dash	1	
4	7213	**Throttle Control Assembly**	1	
5	1379	**Joint**—Ball—Male—(Not required with 7213. See fig. 26) ...	1	
	25CNHJ	**Nut**—Lock—(see fig. 26)	1	
	25WL	**Washer**—Lock—(see fig. 26)	1	
6	1251	**Bearing Assembly**—Steering Housing	2	
7	1254	**Retainer**—Bearing	1	
8	8537	**Housing**—Steering—Upper	1	
9	44CBH138	**Bolt**—Upper to Lower Housing	4	
	44WL	**Washer**—Lock	4	
10	1265	**Nut**—Lock	2	
11	1271	**Washer**—Lock	1	
12	1273	**Key**—Woodruff No. 9	1	
13	4117	**Shaft** and **Pinion**—Steering	1	Refer page 166 for Tractor Nos. where used
	4256	**Shaft** and **Pinion**—Steering	1	
14	1264	**Nut**—Domed	1	
15	1258	**Washer**	1	
16	8535	**Wheel**—Steering	1	
17	1257	**Cap**	1	
18	1259	**Spring**	1	
19	1256	**Retainer**	1	
20	1255	**Seal**	1	
21	7163	**Arm**—Steering Gear—LH.	1	

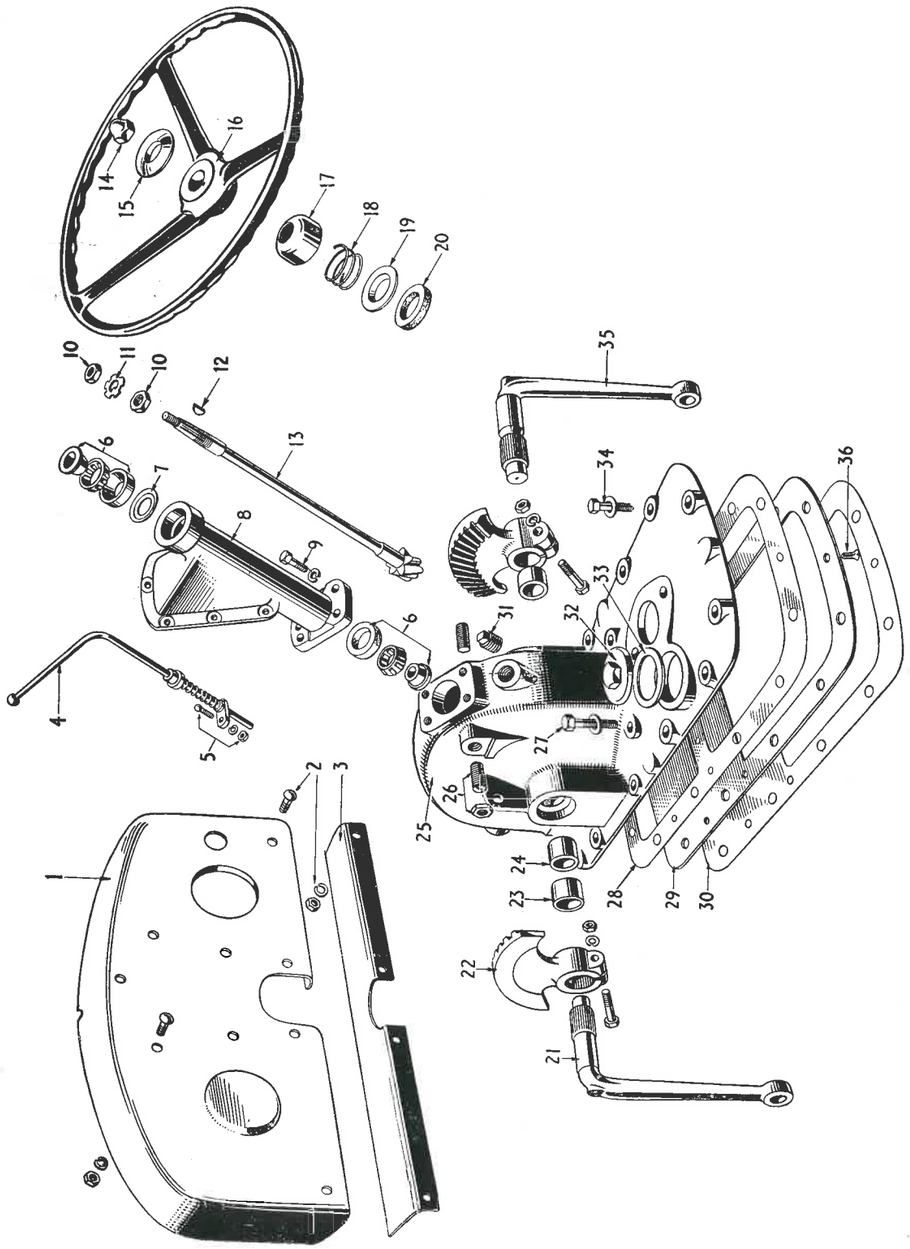

FIG. 16

Ref. No.	Part No.	Description	No. Off	Remarks
22	7166	**Sector**—Steering Gear	2	Refer page 166 for Tractor Nos. where used
	7165	**Sector**—Steering Gear	2	
	44CBH225	**Bolt**—Steering Gear Sector	2	
	44CNH	**Nut**	2	
	44WL	**Washer**—Lock	2	
23	1279	**Bush**—Outer—Steering	2	
24	1280	**Bush**—Inner—Steering	1	
25	1830	**Housing**—Steering—Lower ... ... comprising :—	1	
	8613	**Housing**—Not serviced separately. Used in 1830		
	1279	**Bush**—See Item 23	2	
	1280	**Bush**—See Item 24	1	
	1481	**Stud**—Battery Platform—Not Illustrated	2	
26	1388	**Screw**—Adjusting	2	
	75FNHJ	**Nut**—Locking	2	
27	44CBH206	**Bolt**—Lower Housing—Elektron Trans. Case	2	
	44CBH200	**Bolt**—Lower Housing—C.I. Trans. Case	2	
	1146	**Washer**	2	
28	7116	**Gasket**—Steering Housing	1	4,125th Tractor & Sub.
29	7177	**Plate**—Steering Housing	1	
30	7083	**Gasket**—Steering Housing	2	1 off only on 4,125 & Sub.
31	1245	**Plug**—Filler—Lower Housing	1	
32	1018	**Plug**—Filler—Lower Housing	1	
33	1170	**Gasket**—Filler Plug	1	
34	44CBH188	**Bolt**—Lower Housing—Elektron Trans. Case	12	
	44CBH162	**Bolt**—Lower Housing—C.I. Trans. Case	12	
	1146	**Washer**	12	
35	7162	**Arm**—Steering Gear R.H.	1	
36	1547	**Screw**—Special—Plate	10	4,125th Tractor & Sub.
		Not Illustrated		
	1578	**Seal**—Oil—Steering	2	
	1335	**Gauge Assembly**—Oil Pressure—TE 20	1	
	1799	**Gauge Assembly**—Oil Pressure—TEA 20	1	
	7106	**Tube Assembly**—Oil Pressure Gauge—TE 20	1	
	7152	**Tube Assembly**—Oil Pressure Gauge—TEA 20	1	
	1804	**Clamp**—Oil Pressure Gauge	1	
	1805	**Nut**—Oil Pressure Gauge	1	
	1806	**Washer**—Lock	1	

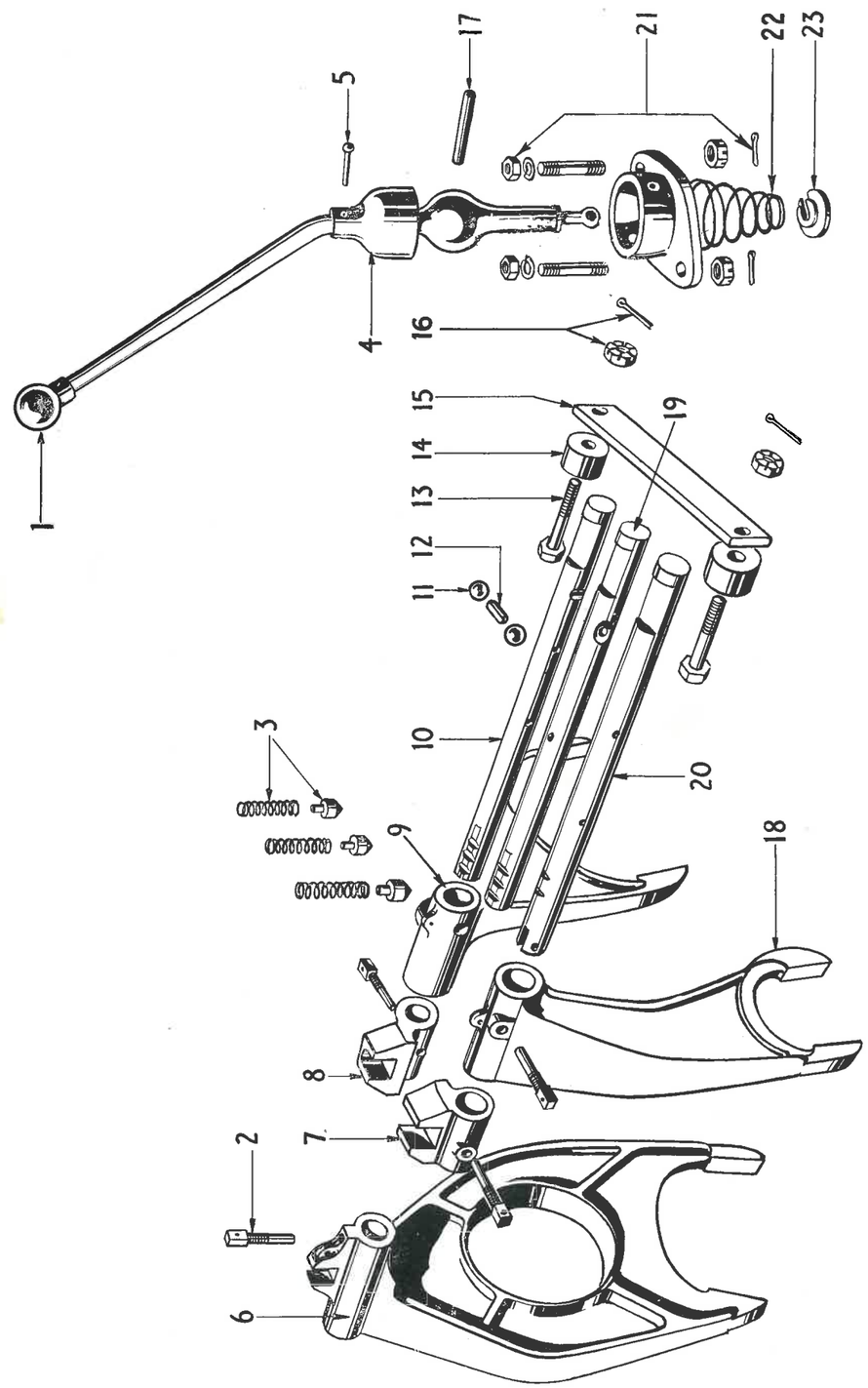

FIG. 17

Ref. No.	Part No.	Description	No. Off	Remarks
		FIG. 17 SELECTOR MECHANISM AND RELATED PARTS		
1	7084	**Lever Assembly**—Gear Shift	1	
2	1994	**Pin**—Gear Shifter Fork	5	
3	1299	**Spring**—Gear Shifter Rail	3	
	1361	**Plunger**—Selector	3	
4	1270	**Cover**—Gear Shift Lever	1	
5	12RB89	**Rivet**—Gear Shift Lever Cover	1	
6	8542	**Fork**—Shifter 3rd and 4th Gears	1	
7	1873	**Selector**—Reverse Shifter Fork	1	
8	4149	**Selector**—1st and 2nd Gear Shifter Fork	1	
9	7085	**Fork**—Shifter—1st and 2nd Gears	1	
10	4177	**Rail**—Shifter—1st and 2nd Gears	1	
11	1297	**Ball** .5″ dia.	2	
12	1298	**Plunger**	1	1st 500 Tractors only
	1474	**Plunger**	1	Tractor 501 & subs.
13	44FBH182TD	**Screw**—Selector Rail Stop (Use with Cast Iron Transmission Case Only)	2	Tractor 501 & subs.
	44FBH212TD	**Screw**—Selector Rail Stop	2	Use with Elektron
	44WF	**Washer**—Flat—Not Illustrated	2	Transmission Case only
14	1456	**Spacer**—Gear Lever Stop	2	Tractor 501 & subs.
15	1457	**Stop Plate**—Gear Lever	1	Tractor 501 & subs.
16	44FNT	**Nut**—Slotted	2	
	09PC88	**Pin**—Cotter	2	
17	1096	**Pin**—Gear Lever	1	
18	8543	**Fork**—Shifter—Reverse	1	
19	4174	**Rail**—Shifter—3rd and 4th Gears	1	
20	4176	**Rail**—Shifter—Reverse Gear	1	

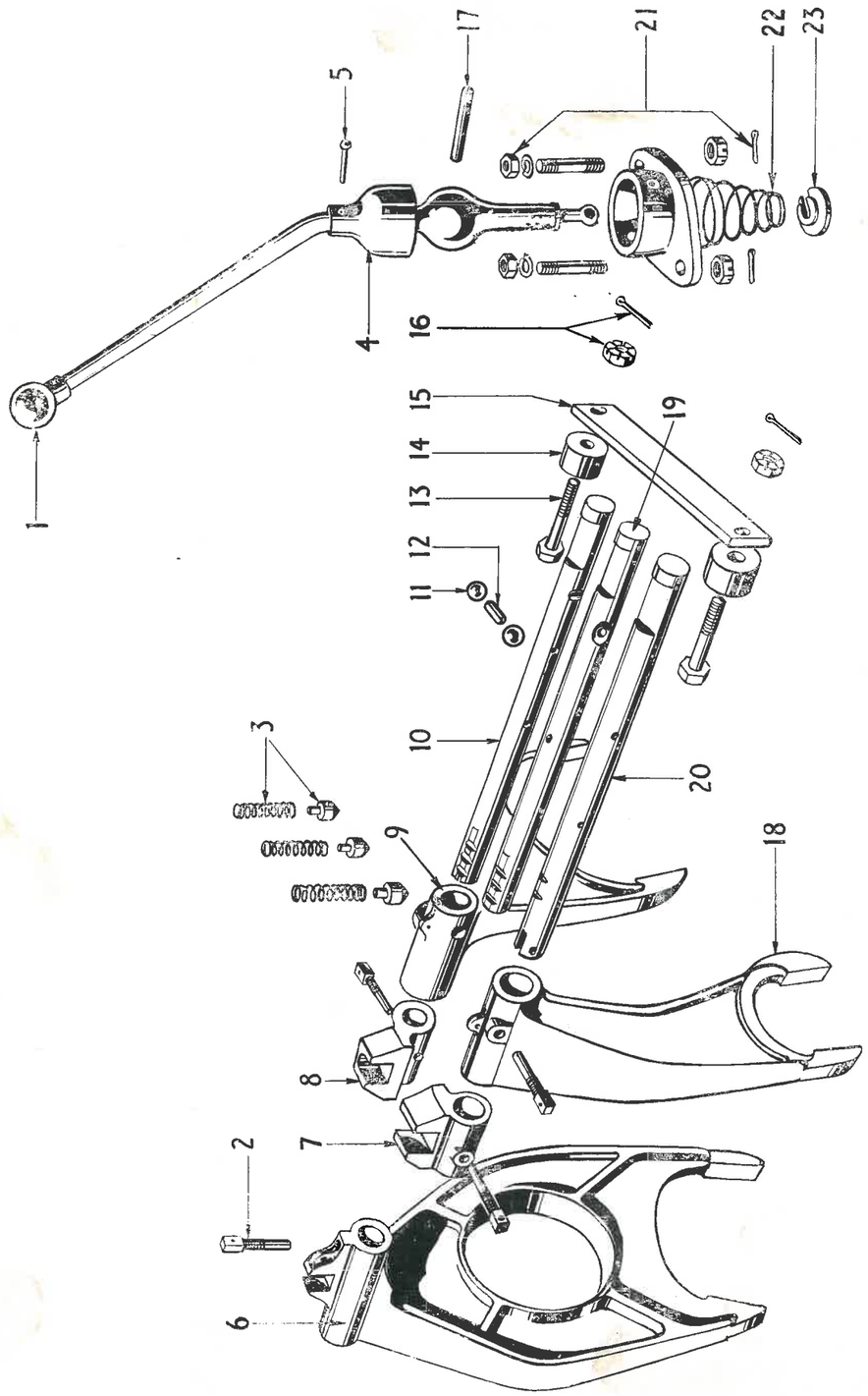

FIG. 17

Ref. No.	Part No.	Description	No. Off	Remarks
21	7081	**Cup**—Gear Shift Lever	1	
	44CBH88	**Bolt**—Hex.	2	2,997 Tractors only
	1507	**Stud**	2	2,998 Tractor & subs.
	44FNH	**Nut**	2	2,998 Tractor & subs.
	44WL	**Washer**—Lock	2	
	1514	**Nut**—Slotted	2	2,998 Tractor & subs.
	O9PC75	**Pin**—Cotter	2	2,998 Tractor & subs.
	1302	**Oil Seal**—Reverse Rail—Not Illustrated	1	
	1417	**Plug Expansion**—Not Illustrated	2	
	1943	**Gasket**—Not Illustrated	1	
	4178	**Stop Plate**—Reverse and Starter Operation (Not Illustrated)	1	2,998 Tractor & subs.
22	1260	**Spring**—Gear Shift Lever	1	
23	1261	**Seat**—Gear Shift Lever Spring	1	

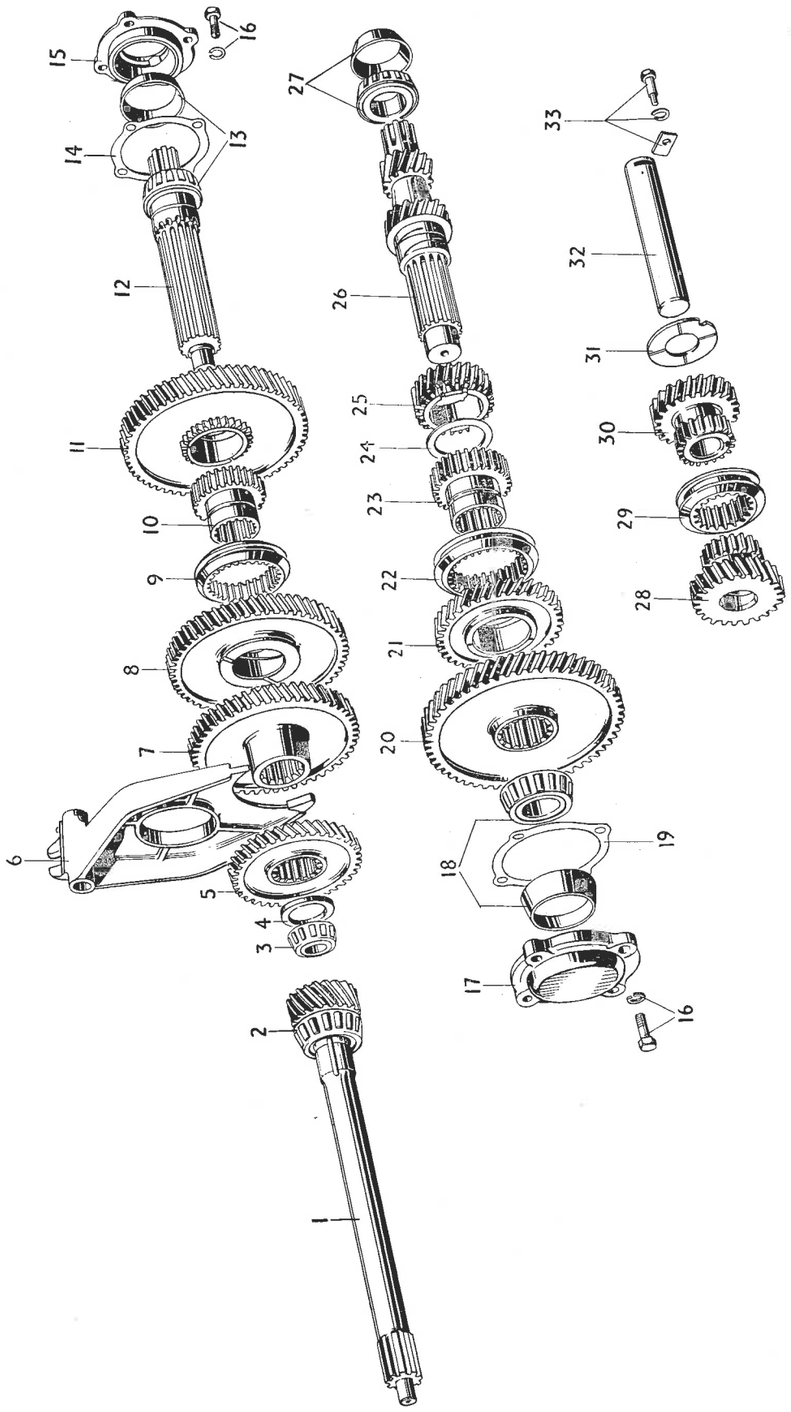

FIG. 18

Ref. No.	Part No.	Description	No. Off	Remarks
		FIG. 18 TRANSMISSION		
1	7044	**Gear**—Transmission Main Drive	1	
2	4073	**Bearing Assembly**—Main Drive	1	
		comprising :—		
	4085	**Cone and Roller**—Not Serviced Separately		
	4075	**Cup**—Not Serviced Separately		
3	4076	**Bearing Assembly**—Transmission Pilot	1	
4	1091	**Washer**—Thrust	1	
5	4039	**Gear**—4th—Main Shaft	1	
6	8542	**Fork**—Shifter—3rd and 4th	1	
7	7029	**Gear**—3rd—Main Shaft	1	
8	7122	**Gear Assembly**—2nd—Main Shaft	1	
		comprising :—		
	7028	**Gear**—Not Serviced Separately		
	1200	**Bush**—Not Serviced Separately		
9 & 10	2057	**Connecting Gear Assembly**	1	
11	7121	**Gear Assembly**—1st—Main Shaft	1	
		comprising :—		
	7027	**Gear**—Not Serviced Separately		
	1200	**Bush**—Not Serviced Separately		
12	4057	**Shaft**—Main Transmission	1	
13	4073	**Bearing Assembly**—Main Shaft	1	
		comprising :—		
	4085	**Cone and Roller**—Not Serviced Separately		
	4075	**Cup**—Not Serviced Separately		
14	1231	**Shim .003″**—Retainer Main Shaft	as req.	
	1232	**Shim .004″**—Retainer Main Shaft	as req.	
	1233	**Shim .007″**—Retainer Main Shaft	as req.	
	1234	**Shim .010″**—Retainer Main Shaft	as req.	
	1235	**Shim .020″**—Retainer Main Shaft	as req.	
	1236	**Shim .005″**—Retainer Main Shaft	as req.	
	1237	**Shim .012″**—Retainer Main Shaft	as req.	
15	1227	**Retainer**—Bearing Main Shaft	1	
16	1224 or 38CBH125	**Screw**—Set—Bearing Retainer	12	Cast Iron Transmission Case only
	38WL	**Washer**—Lock	12	
	38CBH125	**Bolt**—Support to Housing	4	
	38WL	**Washer**—Lock	4	
	38FNH	**Nut**—Hex.	16	
	38WL	**Washer**—Lock	16	
		alternatively:—		
	1224 or 38CBH125	**Set Screw**	16	Elektron Transmission Case only
	38WL	**Washer**—Lock	16	

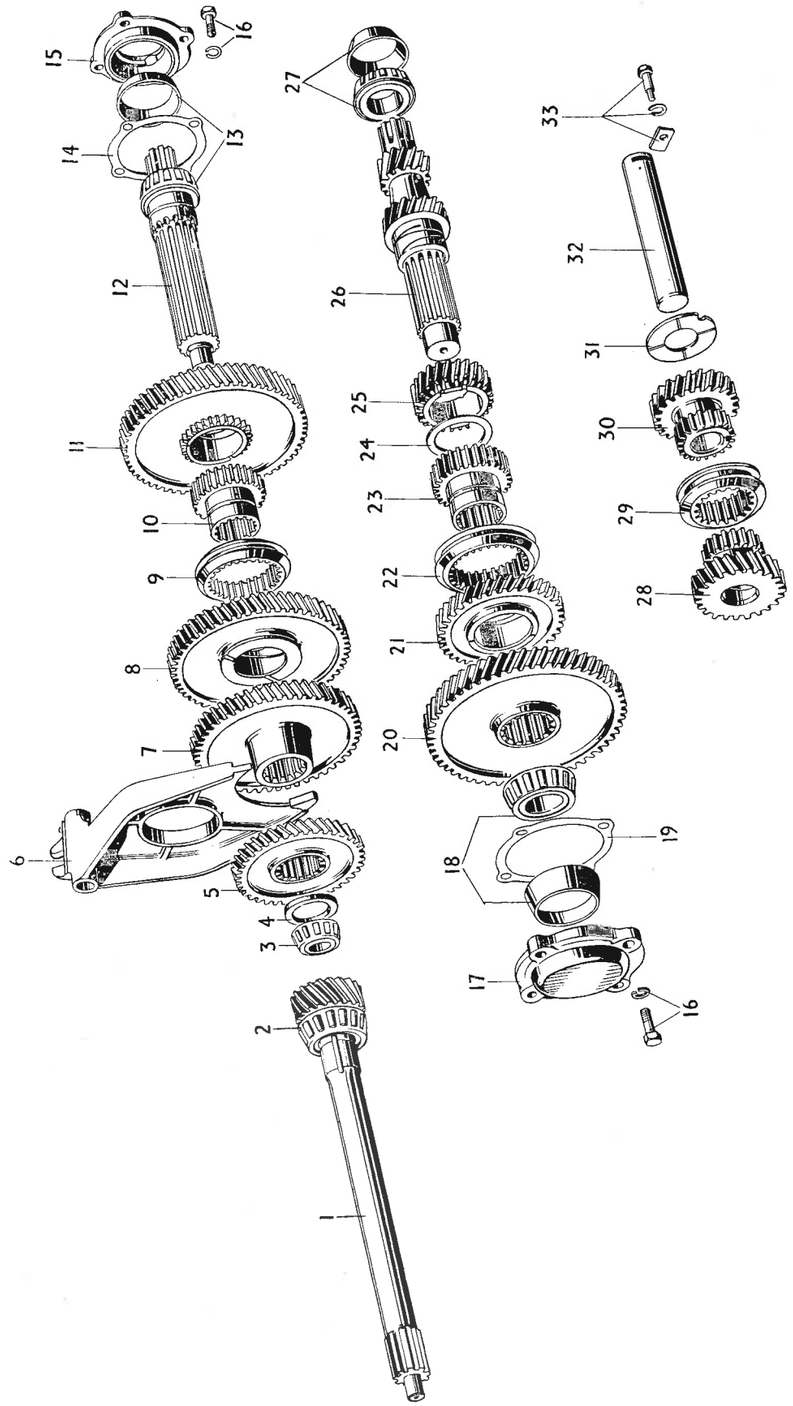

FIG. 18

Ref. No	Part No.	Description	No. Off	Remarks
16	7071	**Retainer**—Main Drive Gear Bearing—Not Illustrated ...	1	
(cont.)	1090	**Washer**—Thrust—Gear Box—Not Illustrated ...	1	
17	1238	**Retainer**—Bearing—Countershaft	1	
18	4073	**Bearing Assembly**—Countershaft Front End ... ... **comprising :—**	1	
	4085	**Cone and Roller**—Not Serviced Separately		
	4075	**Cup**—Not Serviced Separately		
19	1228	**Gasket**—Retainer—Bearing	2	
20	7031	**Gear**—Countershaft	1	
21	7123	**Gear Assembly**—4th—Countershaft ... ... **comprising :—**	1	
	7030	**Gear**—Not Serviced Separately		
	1200	**Bush**—Not Serviced Separately		
22 & 23	2057	**Connecting Gears Assembly**	1	
24	1485	**Washer**—Thrust—Countershaft	1	
25	4040	**Gear**—3rd—Countershaft	1	
26	7120	**Countershaft Assembly** ... ... **comprising :—**	1	
	7037	**Countershaft**—Not Serviced Separately		
	1483	**Bush**—Not Serviced Separately		
27	4073	**Bearing Assembly**—Countershaft—Rear End ... ... **comprising :—**	1	
	4085	**Cone and Roller**—Not Serviced Separately		
	4075	**Cup**—Not Serviced Separately		
28	4109	**Gear Assembly**—Reverse Driver ... ... **comprising :—**	1	
	4041	**Gear**—Not Serviced Separately		
	1225	**Bush**—Not Serviced Separately		
29	4043	**Coupling**—Sliding—Reverse	1	
30	4042	**Gear Assembly**—Reverse Idler ... ... **comprising :—**	1	
	4044	**Gear**—Not Serviced Separately		
	1225	**Bush**—Not Serviced Separately		
31	1094	**Washer**—Thrust	1	
32	1092	**Shaft**—Reverse	1	
33	1278	**Stop**—Reverse Shaft	1	
	1482	**Bolt**—Reverse Shaft Stop	1	
	31WL	**Washer**—Lock	1	

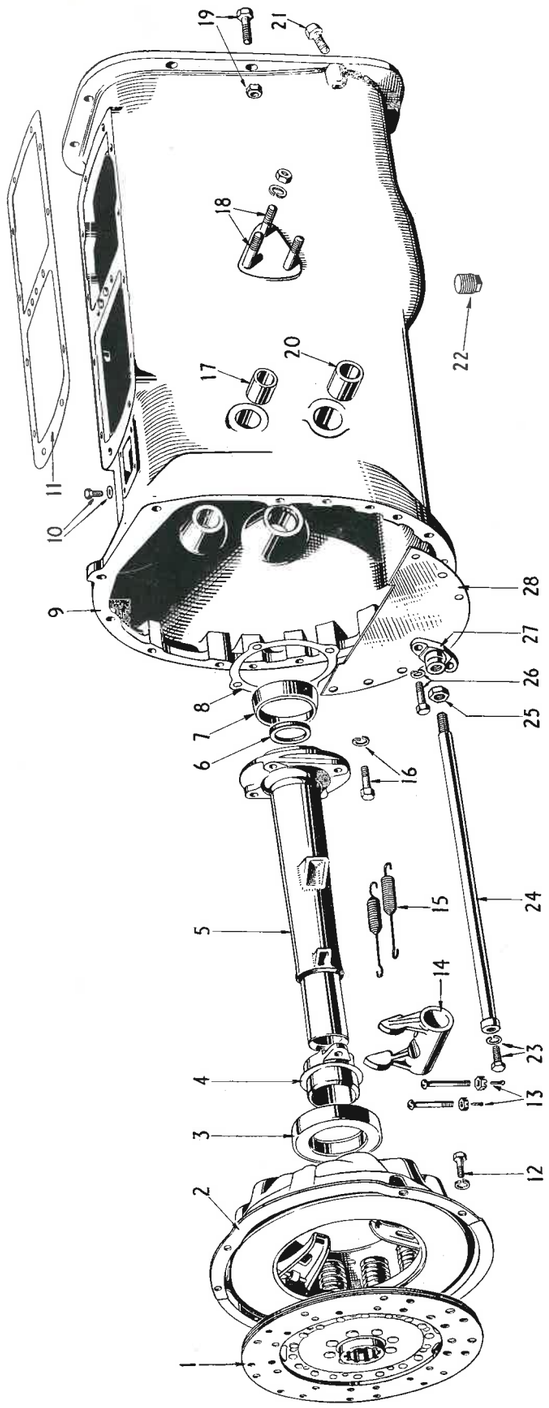

FIG. 19

Ref. No.	Part No.	Description	No. Off	Remarks
		FIG. 19 TRANSMISSION CASE and RELATED PARTS		
1	8572	**Plate**—Driven	1	
2	8624	**Cover Assembly**—See Fig. 20	1	
3	4069	**Bearing**—Clutch Release	1	
4	4119	**Hub**—Clutch Release Bearing	1	
5	7071	**Retainer**—Main Drive Gear Bearing	1	
6	1230	**Seal**—Oil—Main Drive	1	
7	4075	**Cup**—Bearing—Not Serviced Separately—Order 4073 Bearing Assembly		
8	1228	**Gasket**—Retainer—Main Shaft	1	
9	1824	**Case**—Transmission—Elektron ... ... **comprising :—**	1	
	9559	**Case**—Not Serviced Separately		
	1321	**Bush**—Clutch and Brake Shaft—See 17	3	
	1322	**Bush**—Brake Shaft—See 20	1	
	1246	**Plug**—Core—Not illustrated	1	Shipped in sticks of 6
10	31CBH50	**Screw**—Set—Starter Switch	4	Use with Cast
	31WF	**Washer**	4	Iron Case only
	31CBH88	**Screw**—Set—Starter Switch	4	Use with
	31FNH	**Nut**	4	Elektron Case only
	31WF	**Washer**	4	
11	7083	**Gasket**—Trans. Case to Steering Hsg. First 4,124 Tractors only	2	
		Tractor 4,125 and future	1	
12	31CBH88	**Screw**—Set—Cover Fixing	6	
	31WL	**Washer**—Lock	6	
13	25FSR175TD	**Screw**—Clutch Shaft Fork	2	
	25FNT	**Nut**—Castle	2	
	O6PC62	**Pin**—Cotter	2	
14	4127	**Fork**—Clutch Shaft	1	
15	1287	**Spring**—Clutch Release Bearing	2	
16	44CBH112	**Bolt**—Trans. Case to Engine	7	Cast Iron Case only
	1608	**Stud** $\frac{7}{16}''$ × 1.4375—Case to Engine	2	
	44WF	**Washer**	7	

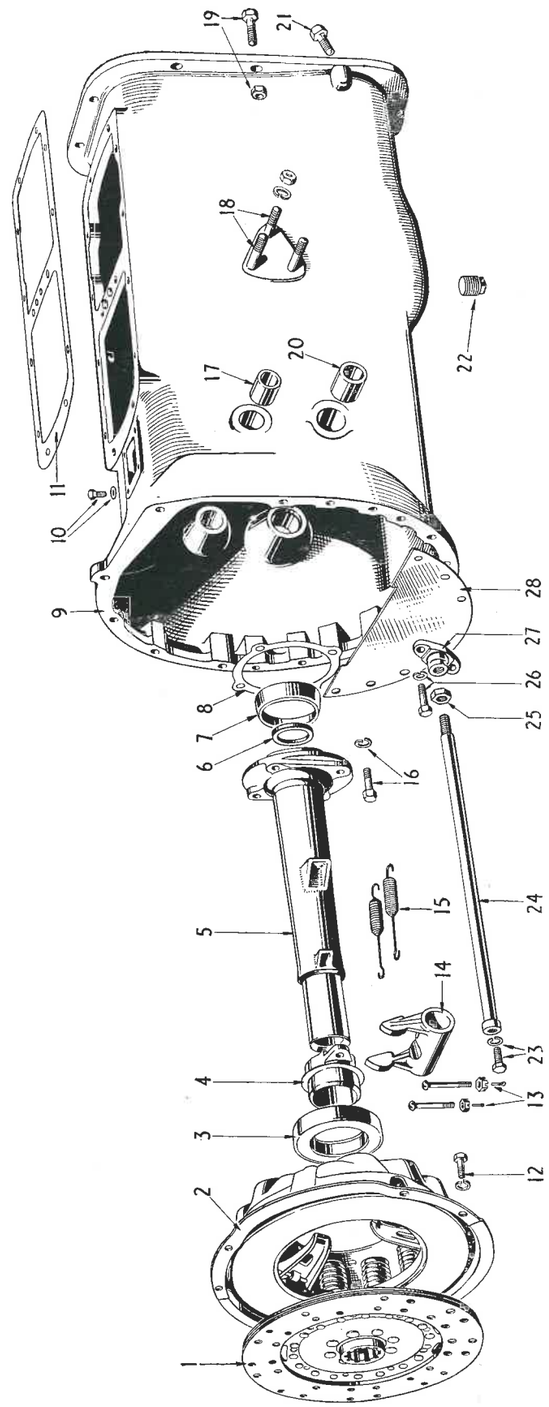

FIG. 19

Ref. No.	Part No.	Description	No. Off	Remarks
17	1321	**Bush**—Brake and Clutch Shaft	3	
18	1247	**Stud** $\frac{7}{16}$" × 3.125"—Radius Rod	4	Cast Iron Trans-
	1475	**Stud** $\frac{7}{16}$" × 1.8125—Radius Rod	2	mission Case only
	1583	**Stud** $\frac{7}{16}$" × 3.50"—Radius Rod	4	Elektron Case only
	1586	**Stud** $\frac{7}{16}$" × 2.125"—Radius Rod	2	
	44FNH	**Nut**	6	
	44WL	**Washer**—Lock	6	
19	44FBH138	**Bolt**—Trans. Case to Centre Housing	8	Cast Iron Trans-
	44FNH	**Nut**	8	mission Case only
	44FWF	**Washer**	8	
		Prior to Tractor No. TE725—9 off		
20	1322	**Bush**—Brake Shaft	1	
21	44CBH138	**Screw**—Set—Trans. Case to Centre Housing—Elektron ...	3	
	44CBH112	**Bolt**—Trans. Case to Centre Housing Cast Iron 1st 724 Tractors	1	
		Tractor TE725 and future	2	
	44FNH	**Nut**	1	
22	1245	**Plug**—Oil Drain	1	
23	44CBH112	**Screw**—Set	2	
	44WL	**Washer**	2	
24	1351	**Strut**	2	
25	62FNHJ	**Nut**—Lock	2	
26	44CBH112	**Screw**—Set—Flange to Transmission Case	4	
	44WL	**Washer**	4	
27	1352	**Flange**	2	
28	7098	**Plate**—Cover	1	
	8607	**Gasket**—Trans. Case to Engine used with Elektron Trans. Casings only	1	

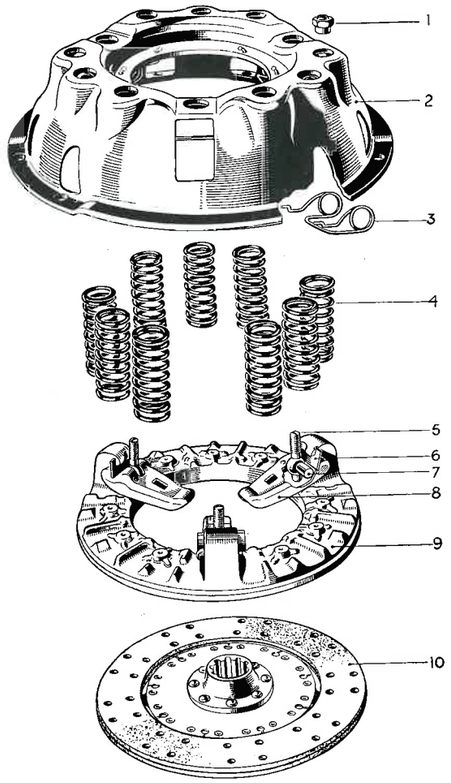

FIG. 20

Ref. No.	Part No.	Description	No. Off	Remarks
		FIG. 20 CLUTCH ASSEMBLY		
	8551	**Clutch Assembly**—Comprising Items 1 through 10 ... Not Serviced as an Assembly. Order Details.		
	8624	**Cover Assembly**—Comprising Items 1 through 9	1	
1	35253	**Nut**—Clutch Eye Bolt—Serviced only paired with item 5 ...	3	
2	8570	**Cover**—Clutch	1	
3	35249	**Spring**—Anti-rattle	3	
4	48648	**Spring**—Clutch Thrust	9	
5	41325	**Bolt**—Eye—Serviced only paired with item 1	3	
6	41326	**Strut**—Clutch Release Lever	3	
7	42537	**Pin**—Clutch Release Lever	3	
8	51681	**Lever**—Clutch Release	3	
9	46032	**Plate**—Clutch Pressure	1	
10	8572	**Plate**—Clutch Driven	1	
	59621	**Set** of Facings and Rivets. In package.	1 set	

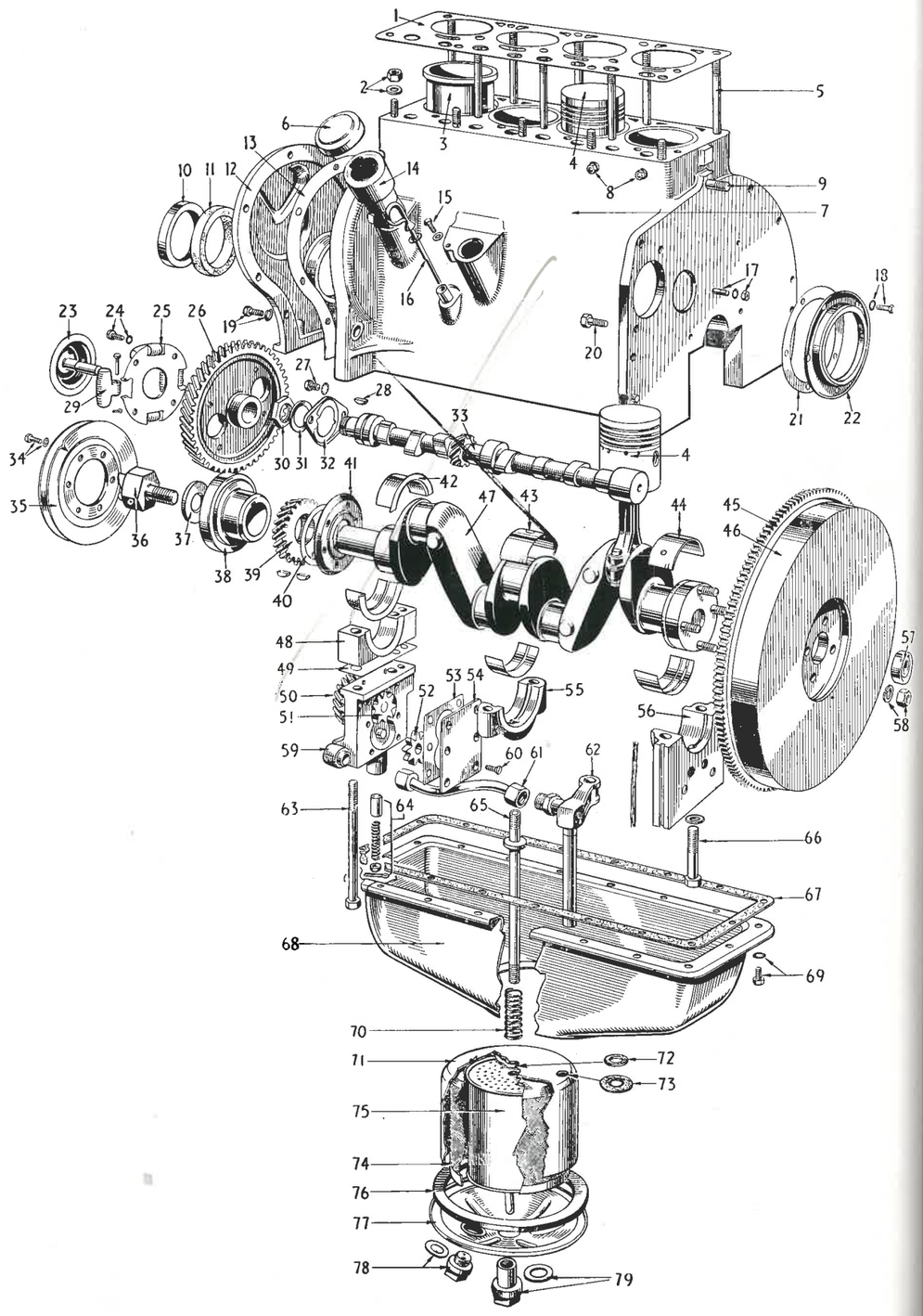

FIG. 21

Ref. No.	Part No.	Description	No. Off	Remarks
		FIG. 21 ENGINE DETAILS. TE20.		
	9509	**Engine Assembly**	1	
1	7135	**Gasket**—Cylinder Head to Cylinder	1	
2	1628	**Nut**—Cylinder Head to Cylinder	13	
	1625	**Washer**—Plain $\frac{29}{64}$"	13	
	1618	**Stud** $\frac{7}{16}$"—14—20 × $1\frac{13}{16}$"	5	
3	7159	**Sleeve** and **Piston** Assembly. See Fig. 22	4	
	4207	**Sleeve**—Cylinder—Not Serviced Separately		
	1677	**Packing**—Cylinder Sleeve, Not Illustrated	8	
4	7136	**Piston**—Not Serviced Separately		
	1566	**Piston Pin**—Not Illustrated	4	
	1629	**Ring**—Retaining—Piston Pin, Not Illustrated	8	
	4308	**Ring**—Piston 1st Groove, Not Illustrated	4	
	4307	**Ring**—Piston 2nd and 3rd Groove, Not Illustrated	8	
	4306	**Ring**—Piston Bottom Groove, Not Illustrated	4	
	1682	**Bushing**—Piston Pin	4	
5	1626	**Stud** $\frac{7}{16}$"14—20 × $4\frac{13}{16}$"	8	
6	1754	**Cap**—Assembly—Oil Filler	1	
7	9576	**Cylinder** and **Crankcase** Assembly—Includes Items 2, 5, 8, 40, 48, 55, 56, 63 and 66	1	
8	1665	**Stud**—Coil Bracket to Crankcase	2	
	25WL	**Washer**—Lock	2	
9	1609	**Stud**—$\frac{7}{16}$"—14—20 × $1\frac{11}{16}$"—Rear end of Crankcase ...	1	
10	1691	**Seal**—Oil—Crankshaft Bearing Front	1	
11	1765	**Seal**—Dust—Fan Drive Pulley	1	
12	8600	**Cover Assembly**—Gear—Composed of :—8590, 1691, 1778, 1780 and 12RB44		
	8590	**Cover**—Not Serviced Separately		
	1910	**Dowel**—Gear Cover to Crankcase, Not Illustrated	2	
	1769	**Shaft**—Governor Lever, Not Illustrated	1	
	1776	**Bearing Needle**—Governor Lever Shaft	2	
	1777	**Seal**—Oil—Governor Lever Shaft	1	
	1767	**Seal**—Dust—Governor Shaft	1	
	1768	**Arm**—Governor Rocker	1	
	1672	**Pin**—Governor Rocker Arm to Shaft	1	
	1673	**Pin**—Governor Lever to Shaft $\frac{5}{32}$" × 1" long	1	
	1778	**Spring**—Governor Bumper	1	
	1780	**Washer**—Fibre—Governor Bumper Spring to Gear Cover	2	
	1779	**Screw**—Governor Bumper Spring	1	
	12RB44	**Rivets**—Governor Bumper Spring to Gear Cover	2	
	25CNH	**Nut**—Governor Bumper Spring Screw	1	
	1391	**Spring**—Governor Lever	1	

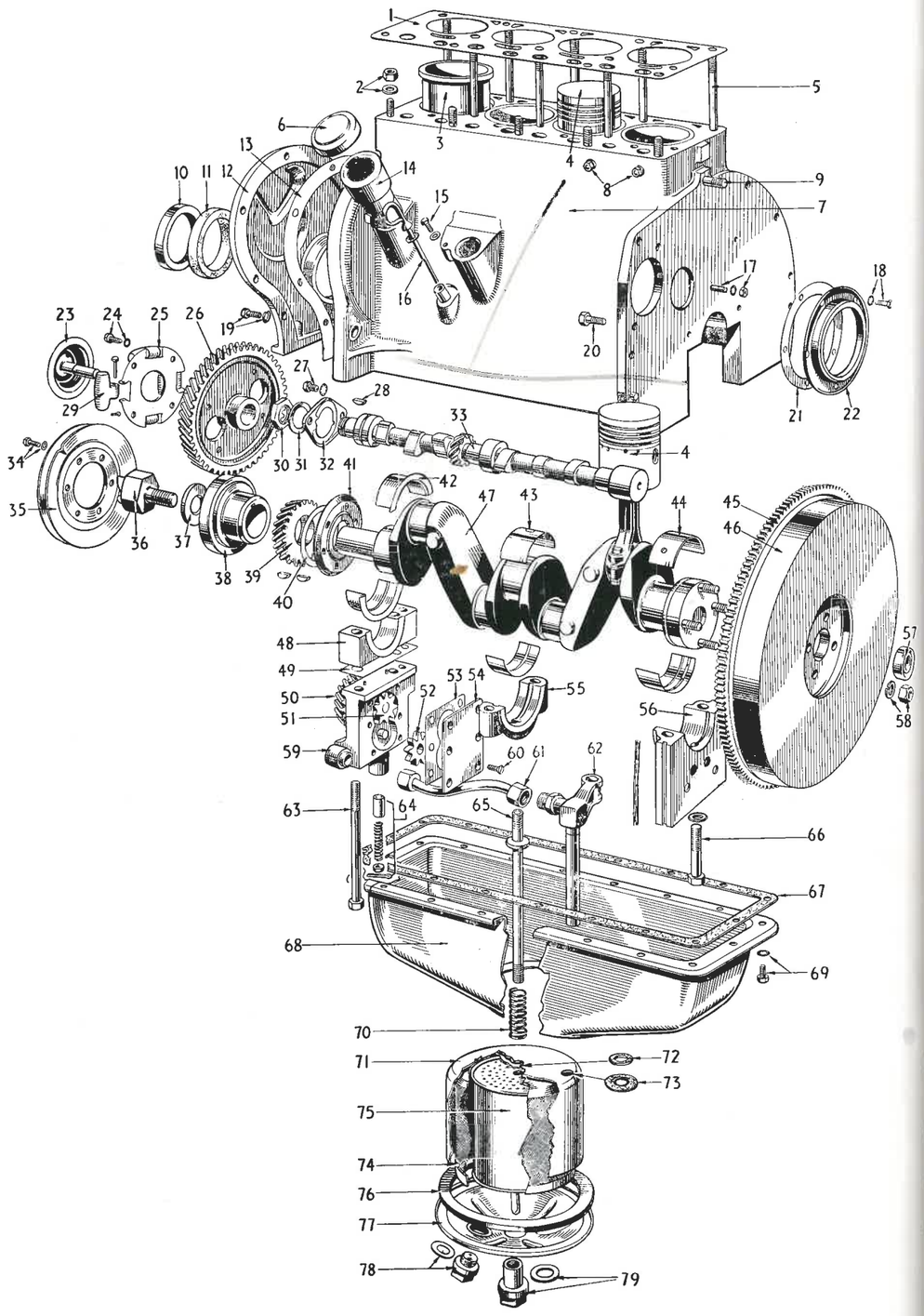

FIG. 21

Ref. No.	Part No.	Description	No. Off	Remarks
	4242	**Lever Assembly**—Governor	1	
		comprising :—		
	1790	**Lever**—Not Serviced Separately		
	1791	**Boss**—Not Serviced Separately		
13	7134	**Gasket**—Gear Cover to Crankcase	1	
14	4233	**Filler**—Oil—Assembly	1	
15	25CBH62	**Set Screw**—Distributor Attachment	1	
	25WL	**Washer**—Lock	1	
	25WF	**Washer**—Flat	1	
16	1748	**Rod**—Oil Gauge—Assembly	1	
	1751	**Washer**—Felt—Oil Gauge Rod Cover	1	
	1752	**Support**—Oil Gauge Rod	1	
17	1634	**Screw**—Seal Retainer to Bearing Cap	2	
18	1634	**Screw** $\frac{1}{4}'' \times \frac{5}{8}''$—Oil Seal Retainer to Crankcase	3	
	25WF	**Washer**—Flat	5	
19	1615	**Screw**—Gear Cover to Crankcase	1	
	38CBH112	**Screw**—Gear Cover to Crankcase	6	
	38WL	**Washer**—Lock	7	
20	44CBH75	**Bolt**—Hex.	2	Cast Iron Transmission Case Only
	44CBH112	**Screw**—Set	11	
	44FNH	**Nut**—Hex	1	
	44WL	**Washer**—Lock	4	
	1608	**Stud**	2	
	1609	**Stud**	1	
	44FNH	**Nut**—Hex	14	
	44WF	**Washer**—Flat	6	
		alternatively :—		
	44CBH138	**Screw**—Set	6	Elektron Transmission Case Only
	44CBH150	**Screw**—Set	5	
	44CBH88	**Screw**—Set	2	
	1609	**Stud**	1	
	44FNH	**Nut**—Hex.	1	
	44WL	**Washer**—Lock	4	
21	1695	**Gasket**—Oil Seal Retainer Crankshaft	1	
	1692	**Retainer**—Rear Oil Seal Assembly	1	
22	1781	**Seal**—Oil—Crankshaft—Rear	1	
23	1773	**Cup** and **Shaft Assembly**—Governor	1	
24	1670	**Screw**—Governor Weight Plate Camshaft Gear	4	
	1671	**Washer**—Lock—$\frac{3}{16}''$	4	
25	4243	**Plate**—Governor Weight	1	

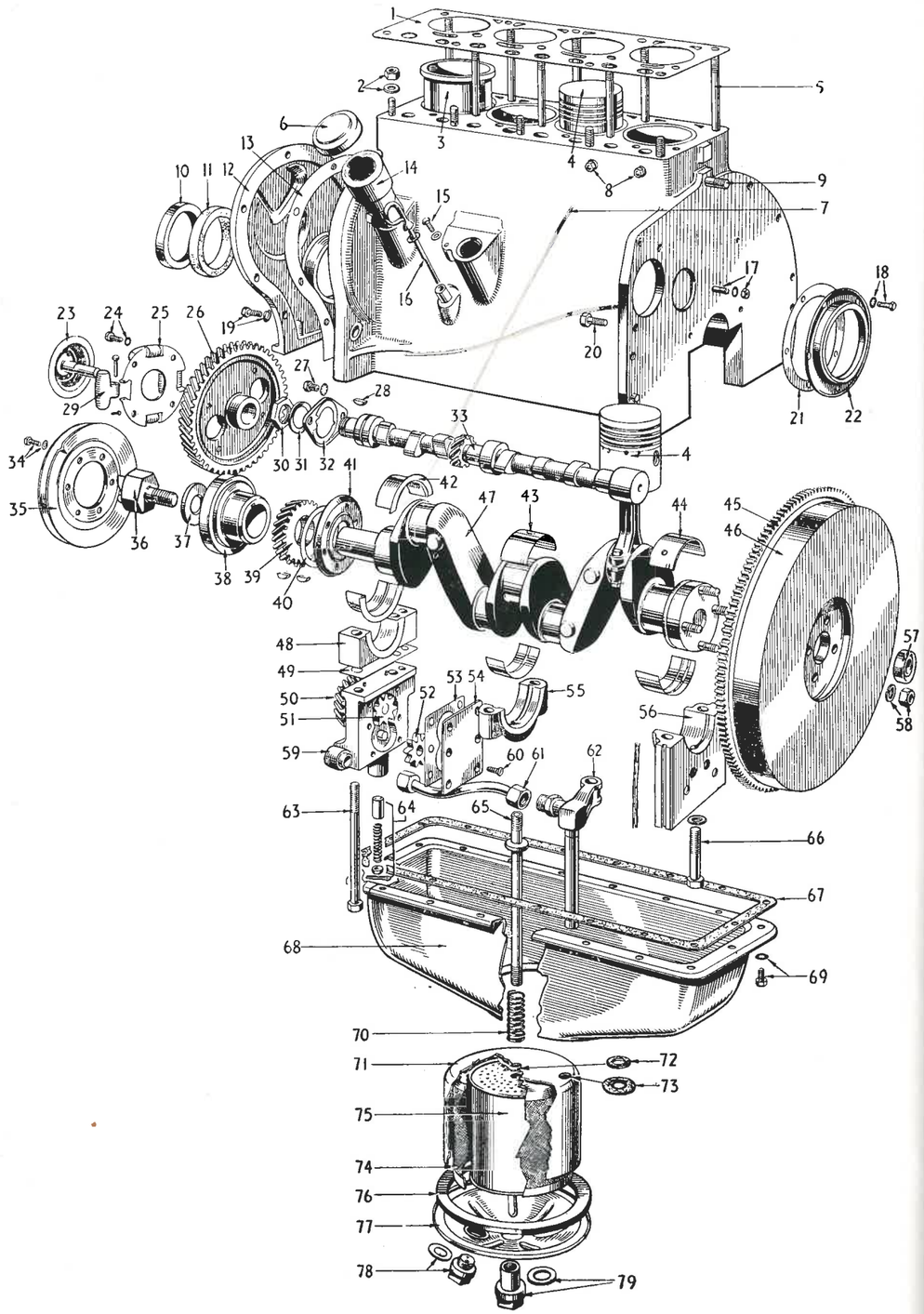

FIG. 21

Ref. No.	Part No.	Description	No. Off	Remarks
26	4212	**Gear**—Timing—Camshaft	1	
27	1630	**Screw** $\frac{5}{16}$″—18 × $\frac{1}{2}$″ Camshaft Thrust Plate to Crankcase	2	
	1631	**Washer**—Lock $\frac{5}{16}$″	2	
28	1241	**Key**—Camshaft Timing Gear to Camshaft	1	
29	1770	**Weight**—Governor Assembly	4	
		comprising :—		
	1788	**Weight**—Not Serviced Separately		
	1771	**Insert**—Not Serviced Separately		
	1772	**Pin**—Governor Weight to Plate	4	
	06PC62	**Pin**—Cotter $\frac{1}{16}$″ × $\frac{5}{8}$″ Governor Weight to Plate Pin ...	4	
30	1632	**Nut**—Camshaft Timing Gear to Camshaft	1	
31	1911	**Washer**—Cam Gear to Camshaft	1	
32	1683	**Plate**—Camshaft Thrust	1	
33	8592	**Camshaft**	1	
34	1664	**Screw** and **Lockwasher Assembly**	6	
35	4240	**Pulley**—Fan Drive—on Crankshaft	1	
	1666	**Key**—Fan Drive Pulley to Crankshaft	1	
36	1690	**Jaw**—Starting—Crankshaft	1	
37	1633	**Washer**—Crankshaft Starting Jaw to Crankshaft	1	
38	4239	**Hub**—Pulley—on Crankshaft	1	
39	4213	**Gear**—Crankshaft—Timing	1	
	1666	**Key**—Crankshaft Timing Gear to Crankshaft	1	
40	1685	**Plate**—Thrust Crankshaft	1	
	1686	**Washer**—Thrust Crankshaft	1	
	1621	**Pin**—Crankshaft Thrust Washer to Crankshaft	3	
	1687	**Shim**—Thrust—Crankshaft .002″	as req.	
	1688	**Shim**—Thrust—Crankshaft .008″	as req.	
41	1689	**Thrower**—Crankshaft Oil	1	
42	4245	**Bearing**—Crankshaft Main—Front, Upper and Lower ...	1	
	4245/2	ditto .020″ undersize ...	1	
	4245/3	ditto .030″ undersize ...	1	
	4245/4	ditto .040″ undersize ...	1	
43	4246	**Bearing**—Crankshaft Main—Centre, Upper and Lower ...	1	
	4246/2	ditto .020″ undersize ...	1	
	4246/3	ditto .030″ undersize ...	1	
	4246/4	ditto .040″ undersize ...	1	

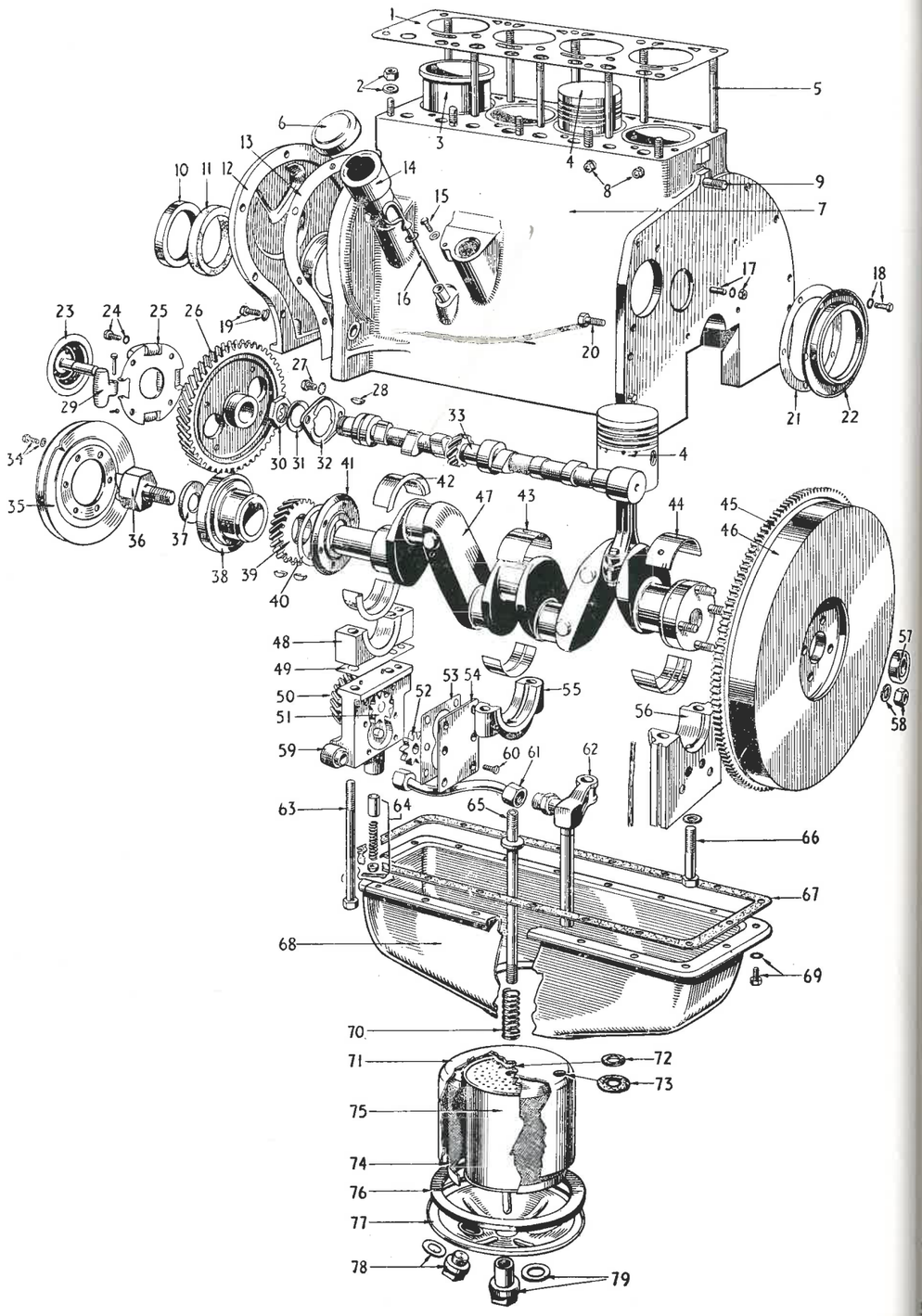

FIG. 21

Ref. No.	Part No.	Description	No. Off	Remarks
44	4247	**Bearing**—Crankshaft Main—Rear Upper and Lower ...	1	
	4247/2	ditto .020″ undersize ...	1	
	4247/3	ditto .030″ undersize ...	1	
	4247/4	ditto .040″ undersize ...	1	
45	4222	**Gear**—Starter Ring	1	
46	7139	**Flywheel Assembly**	1	
47	1637	**Stud**—Flywheel to Crankshaft $\frac{7}{16}$″—20 × 1$\frac{3}{4}$″	4	
	8593	**Crankshaft**	1	
48	4214	**Bearing Cap**—Front	1	
	1676	**Dowel Ring**—Crankshaft Bearing Cap to Cylinder	1	
	4217	**Lock Wire** 11″ long—Bearing Cap Bolts—Not serviced separately		
49	1723	**Shim .002**″—Oil Pump Body to Bearing Cap	as req.	
50	4251	**Oil Pump Assembly**—Complete	1	
	1725	**Oil Pump Drive Gear**—Driven	1	
	1735	**Gear** and **Shaft Assembly**—Oil Pump Drive ... .. **comprising :—**	1	
	1728	**Gear**—Not Serviced Separately		
	1736	**Shaft**—Not Serviced Separately		
	1649	**Pin** $\frac{1}{8}$″ dia × $\frac{1}{4}$″ long—Not Serviced Separately		
51	4252	**Body**—Assembly—Oil Pump ... ... **comprising :—**	1	
	7141	**Body**—Not Serviced Separately		
	1733	**Plug**—Hubbard—Oil Pump Body	3	
	1734	**Stud**—Oil Pump Idler Gear	1	
	1727	**Bushing**—Oil Pump Body	2	
52	1726	**Gear**—Idler	1	
53	1730	**Gasket**—Oil Pump Cover to Body	1	
54	1724	**Cover**—Oil Pump Body	1	
	1648	**Pin**—Oil Pump Bearing Cap	2	
55	4215	**Bearing Cap**—Centre	1	
	1684	**Plug**—Hubbard—Camshaft Bushing—Rear	1	
	1623	**Plug**—Pipe—Crankcase Oil Head	2	
56	7138	**Bearing Cap**—Rear and Filler Block	1	
	1747	**Packing**—Filler Block	as req.	
57	1112	**Bearing**—Clutch Pilot	1	
58	1638	**Nut**—Flywheel to Crankshaft Stud	4	
	44WL	**Washer**—Lock	4	
59	1740	**Elbow**—Oil Pump Inlet to Pump	1	

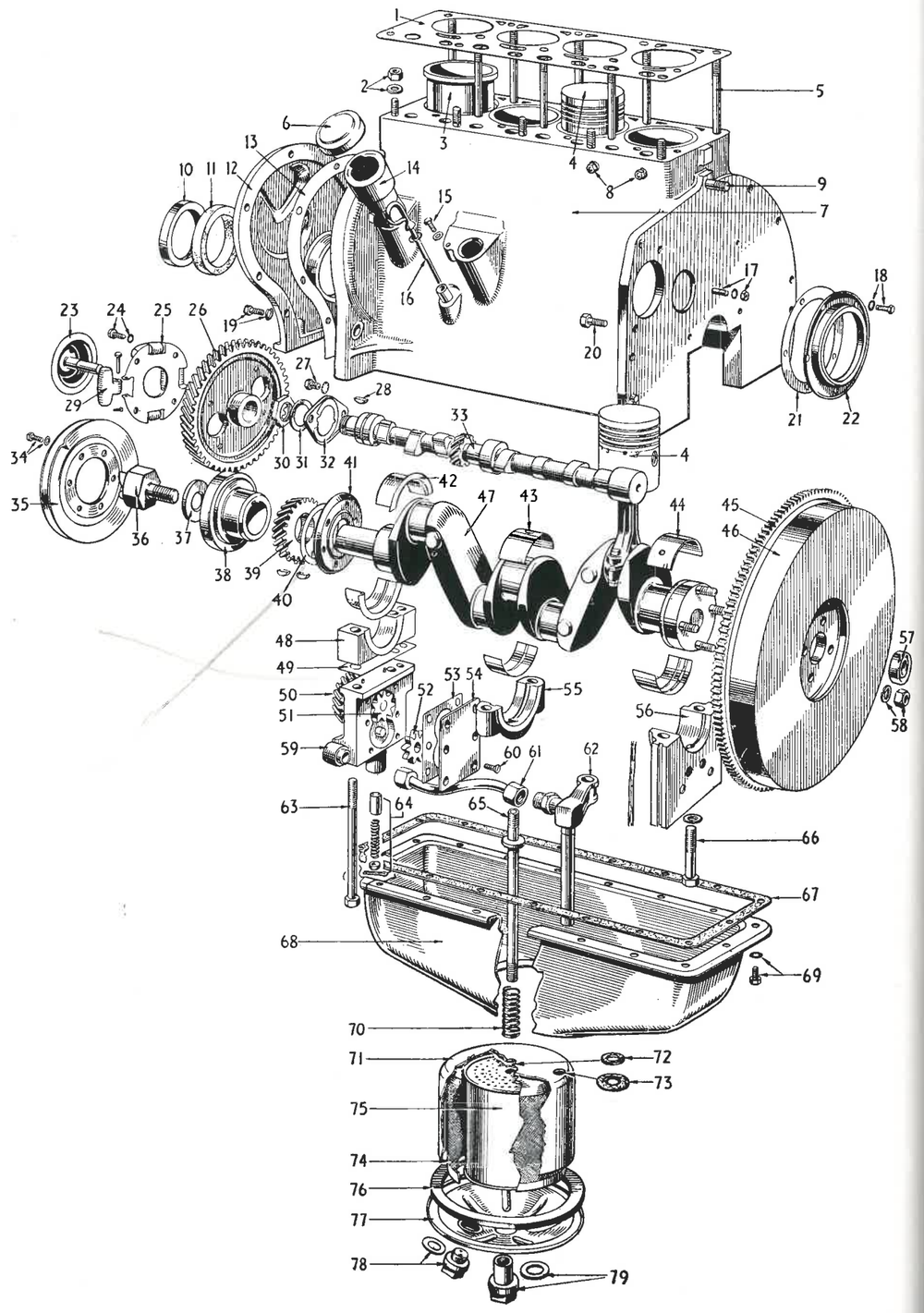

FIG. 21

Ref. No.	Part No.	Description	No. Off	Remarks
60	1647	**Screw**—Oil Pump Cover to Body	6	
61	1729	**Tube Assembly**—Oil Pump Inlet ... ... **comprising :—**	1	
	1786	**Tube**—Not Serviced Separately		
	1737	**Nut**—Oil Pump Inlet—Not Serviced Separately		
	1738	**Sleeve**	2	
62	1741	**Support**—Oil Pump—Inlet Tube	1	
	1743	**Tube**—Oil Filter Suction	1	
	1739	**Elbow**—Oil Pump Inlet Tube to Support	1	
63	1616	**Screw**—Oil Pump to Crankcase	2	
64	1731	**Valve**—Relief Oil Pressure	1	
	1744	**Spring**—Oil Pressure Relief Valve	1	
	1732	**Retainer**—Oil Relief Spring	1	
	12PC125	**Pin**—Cotter—Oil Relief Spring Retainer	1	
65	1742	**Tube Assembly**—Oil Filter	1	
66	1617	**Screw**—Centre and Rear Brg. Cap to C/case	4	
	1619	**Washer**	6	
67	7142	**Gasket**—Oil Pan to Crankcase	1	
68	8596	**Pan**—Oil	1	
69	1653	**Screw** and **Lockwasher** Assembly—$\frac{5}{16}$"—18 × $\frac{3}{4}$" ...	18	
70	1711	**Spring**—Oil Strainer Screen	1	
71	4232	**Cover**—Oil Strainer	1	
72	1651	**Washer**—Felt—Oil Filter Tube	1	
73	1652	**Washer**—Felt—Oil Filter Suction Tube	1	
74	4231	**Screen**—Assembly—Oil Strainer	1	
75	4244	**Element**—Oil Filter	1	
76	4228	**Gasket**—Oil Pan Hand Hole Cover to Oil Pan	1	
77	4229	**Cover Assembly**—Hand Hole	1	
78	1746	**Plug**—Drain—Oil Pan	1	
	1655	**Gasket**—Oil Pan Drain Plug	1	
79	1745	**Nut**—Oil Pan Hand Hole Cover	1	
	1654	**Gasket**—Oil Pan Hand Hole Cover Nut	1	

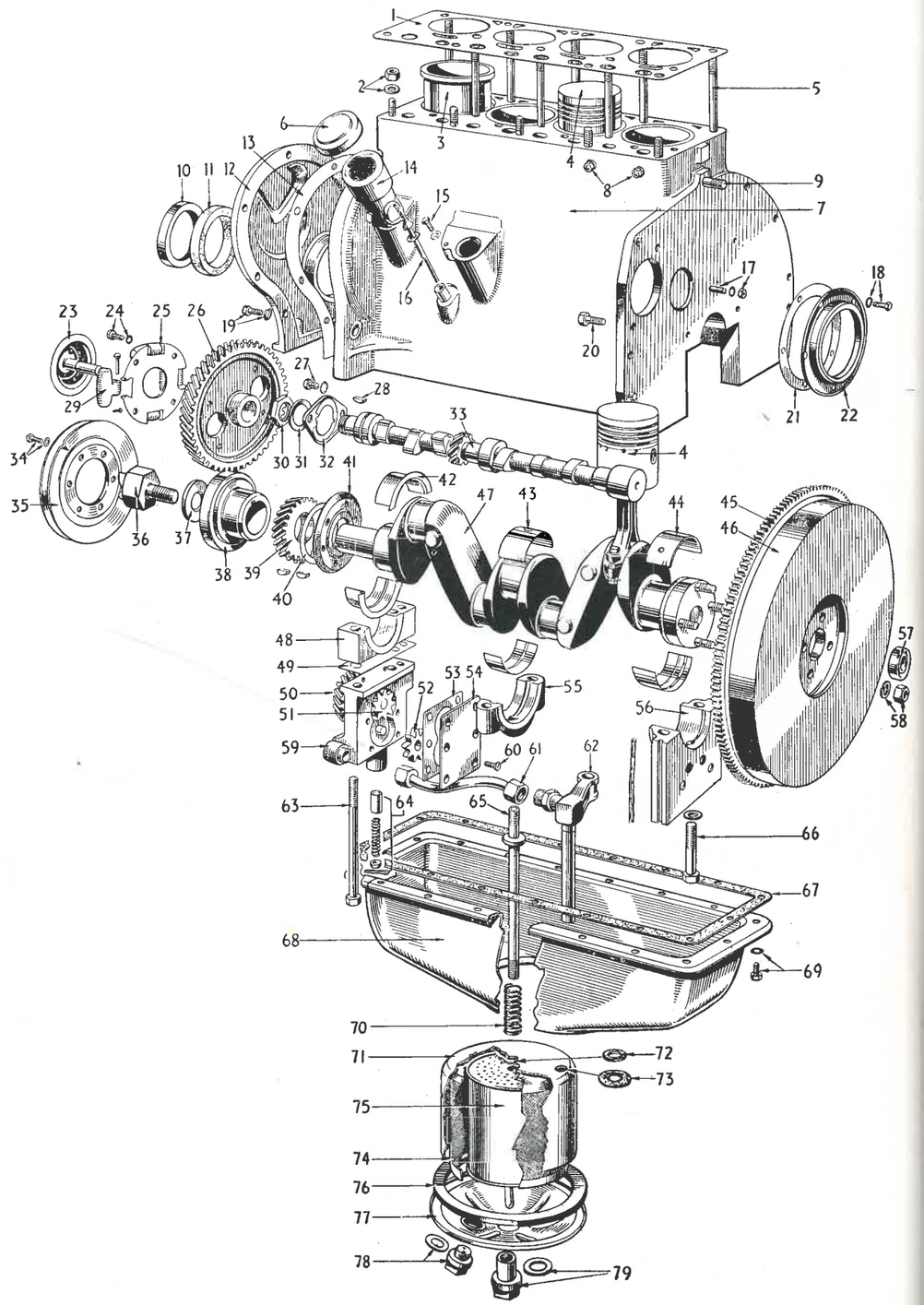

FIG. 21

Ref. No.	Part No.	Description	No. Off	Remarks
	1794	**Gasket Set—comprising :—**		
	7135	**Gasket**—Cylinder Head.	1	
	7144	**Gasket**—Manifold	1	
	1730	**Gasket**—Oil Pump	1	
	4224	**Gasket**—Cylinder Head Cover	1	
	7134	**Gasket**—Gear Cover	1	
	7142	**Gasket**—Oil Pan...	1	
	1677	**Packing**—Cylinder Liner	8	
	4228	**Gasket**—Hand Hole Cover	1	
	1691	**Oil Seal**—C/shaft—Front	1	
	2082	**Gasket**—Valve Stem Oil Guard	8	
	1695	**Gasket**—Oil Seal Retainer	1	
	4236	**Gasket**—Water Pump	1	
	1747	**Packing**—Filler Block	2	
	1765	**Dust Seal**—Fan Pulley	1	
	1777	**Oil Seal**—Governor Lever Shaft	1	
	1781	**Oil Seal**—C/shaft—Rear	1	
	1645	**Gasket**—Screw	2	
	1655	**Gasket**—Plug	1	
	1654	**Gasket**—Nut	1	
	1756	**Gasket**—Water Pump Support to Body	1	
	4237	**Seal**—Water Pump	1	
	1767	**Dust Seal**—Governor Shaft	1	
	1651	**Felt**—Oil Tube	1	
	1652	**Felt**—Oil Tube	1	
	1751	**Felt**—Oil Gauge Rod	1	
		Not Illustrated		
	8599	**Connecting Rod Assembly**—(See Fig. 22)	4	
		comprising :—		
	8591	**Rod** and **Cap**—Not Serviced Separately		
	1680	**Bolt**—Connecting Rod	8	See Fig. 22
	1681	**Lock**—Nut—Connecting Rod Bolts	8	,, ,, 22
	1682	**Bushing**—Piston Pin	4	,, ,, 22
	4211	**Bearing**—Upper and Lower. Not included in Con. Rod Assy.	8	,, ,, 22
	8595	**Cover Assembly**—Cylinder Head	1	,, ,, 24
	1643	**Nut**—Cylinder Head Cover to Cylinder	2	,, ,, 24
	1644	**Washer**—Plain—Cylinder Head Cover to Cylinder Head ...	2	,, ,, 24
	1645	**Gasket**—Cylinder Head Cover to Cylinder Screws ...	2	,, ,, 24
	4224	**Gasket**—Cylinder Head Cover to Cylinder Head	1	,, ,, 24
	1478	**Union**—Oil Pipe—Crankcase to Pressure Gauge	1	
	1659	**Stud**—Water Pump Body	1	
	1660	**Stud**—Water Pump Body	2	
	1333	**Cock**—Drain—Cylinder Block	1	

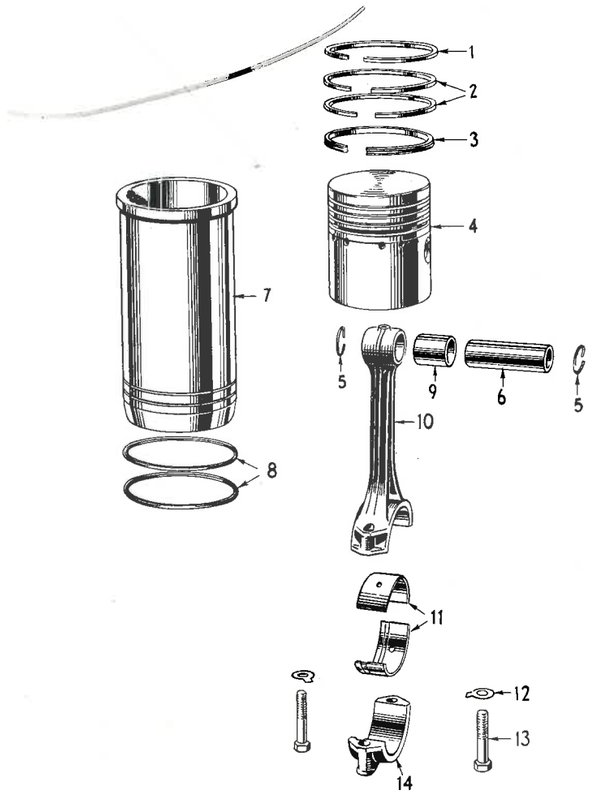

FIG. 22

Ref. No.	Part No.	Description	No. Off	Remarks
		FIG. 22 PISTON, CONNECTING ROD, SLEEVE and RELATED PARTS. TE20.		
	7159	**Sleeve** and **Piston Assembly.** Comprising Items 1 through 8	4	
	7170	**Set of 4**—Part No. 7159 in Carton	1	
1	4308	**Ring**—Piston 1st Groove	4	
2	4307	**Ring**—Piston 2nd and 3rd Groove	8	
3	4306	**Ring**—Piston—Bottom Groove	4	
4	7136	**Piston**—Not Serviced Separately, Order 7159		
5	1629	**Ring**—Piston Pin—Retaining	8	
6	1566	**Pin**—Piston	4	
7	4207	**Sleeve**—Cylinder—Not Serviced Separately, Order 7159 ...		
8	1677	**Packing**—Cylinder Sleeve	8	
	8599	**Rod Connecting**—Assembly. Comprising Items 9, 10, 12, 13 and 14.	4	
9	1682	**Bush**—Piston Pin	4	
10	8591	**Rod**—Connecting—See Item 14, Not Serviced Separately Order 8599		
11	4211	**Bearing**—Connecting Rod	8	
	4211/2	**Bearing**—Connecting Rod—.020″ undersize		
	4211/3	**Bearing**—Connecting Rod—.030″ undersize		
	4211/4	**Bearing**—Connecting Rod—.040″ undersize		
12	1681	**Lock**—Connecting Rod Bolt	8	
13	1680	**Bolt**—Connecting Rod	8	
14	8591	**Cap**—Connecting Rod—See Item 10—Not Serviced Separately—Order 8599		

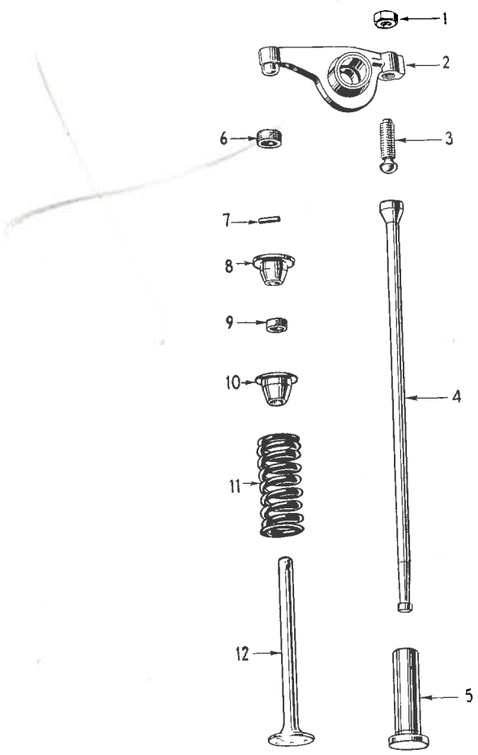

FIG. 23

Ref. No.	Part No.	Description	No. Off	Remarks
		FIG. 23 VALVE AND PUSH ROD ASSEMBLY. TE.20.		
	1783	**Arm Assembly**—Rocker—R.H. Comprising Items 1, 2 and 3	4	
	1784	**Arm Assembly**—Rocker—L.H. Comprising Items 1, 2 and 3	4	
1	31FNHJ	**Nut**—Rocker Arm Screw	8	
2	1705	**Arm**—Rocker R.H.—Not Serviced Separately—Order 1783		
	1703	**Arm**—Rocker L.H.—Not Serviced Separately—Order 1784		
3	1709	**Screw**—Rocker Arm Adj.	8	
4	1696	**Rod**—Valve Push	8	
	1697	**Tube**—Push Rod—Not Illustrated	8	
5	1698	**Tappet**—Valve	8	
6	1717	**Cap**—Valve Stem	8	
7	1710	**Lock**—Valve Spring Retainer	8	
8	1708	**Retainer**—Valve Spring	8	
9	2082	**Gasket**—Valve Stem—Oil Guard	8	
10	2083	**Guard**—Oil—Valve Stem	8	
11	1707	**Spring**—Valve	8	
12	1701	**Valve**—Exhaust and Inlet	8	
	1678	**Insert**—Valve Seat Exhaust .010" oversize—Not Illustrated	4	
	1704	**Guide**—Valve Stem—Not Illustrated	8	

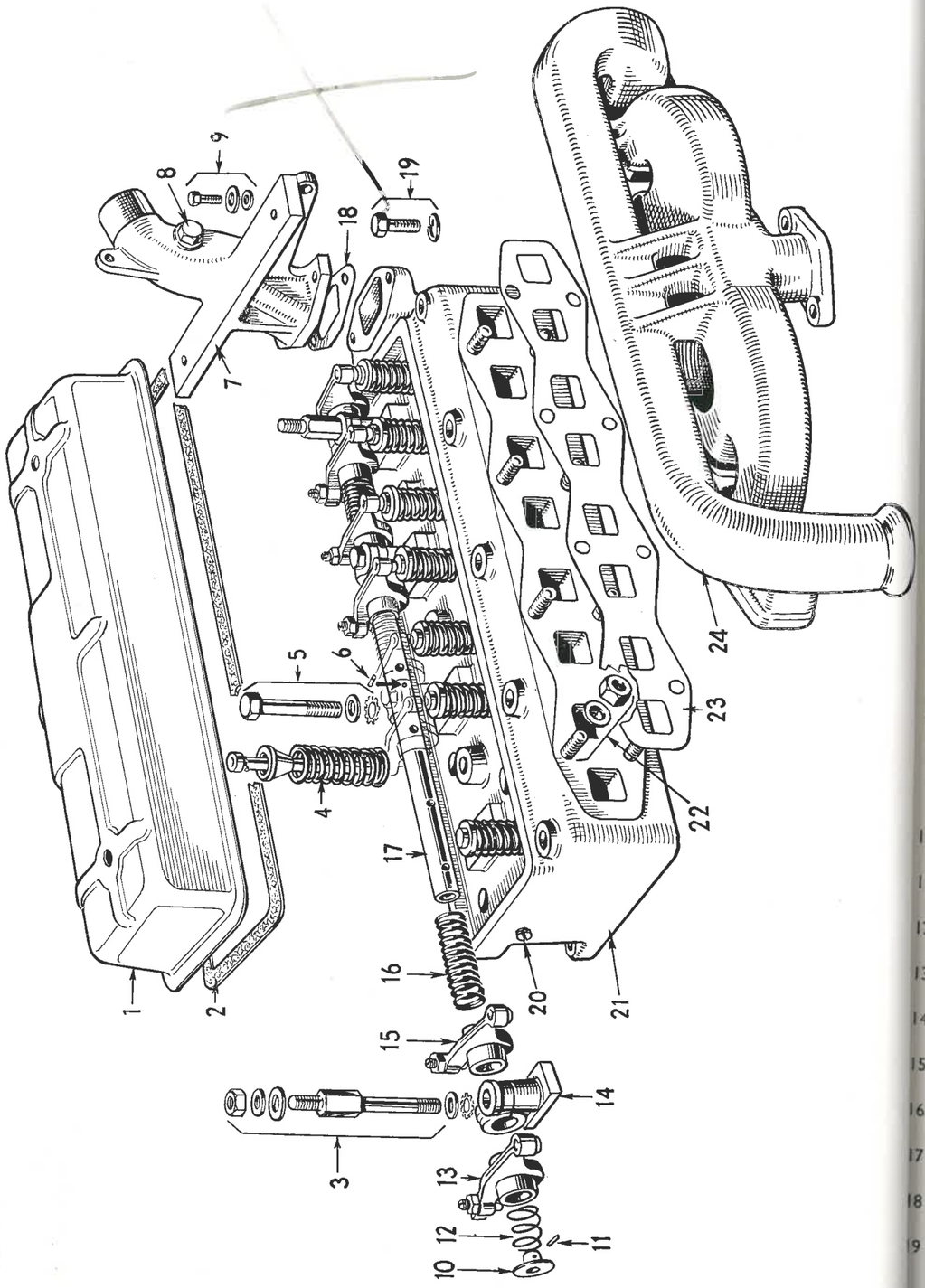

FIG. 24

Ref. No.	Part No.	Description	No. Off	Remarks
		FIG. 24 CYLINDER HEAD and RELATED PARTS. TE20.		
1	8595	**Cover**—Cylinder Head	1	
2	4224	**Gasket**—Cylinder Head Cover to Cylinder Head	1	
3	1716	**Stud**—Rocker Arm Shaft to Cylinder Head—Special ...	2	
	1642	**Washer**—Plain—Rocker Arm Shaft to Cylinder Head—Special	2	
	1643	**Nut**—Cylinder Head Cover to Cylinder Head	2	
	1645	**Gasket**—Cylinder Head Cover to Cylinder Head	2	
	1644	**Washer**—Plain—Cylinder Head Cover to Cylinder Head ...	2	
4		**Valve** and **Spring Assembly**—Not Serviced. See Figure 23 for Details		
5	1641	**Screw**—Rocker Arm Shaft Support to Cylinder Head ...	2	
	1642	**Washer**—Plain	2	
	1644	**Washer**—Plain	4	
6	1640	**Pin**—Rocker Arm Shaft	1	
7	7099	**Elbow**—Water Outlet	1	
8	1389	**Plug**—Elbow	1	
	1390	**Gasket**—Plug	1	
9	31CBH62	**Bolt**—Elbow to Fuel Tank	2	1st 200 Tractors Only
	31FBH62	**Bolt**—Elbow to Fuel Tank	2	201st Tractor and subs.
	31WF	**Washer**—Flat—Elbow to Fuel Tank	2	
	31WL	**Washer**—Lock—Elbow to Fuel Tank	2	
10	1714	**Plug**—Rocker Shaft Oil	2	
11	1640	**Pin**—Oil Plug	2	
12	1712	**Spring**—Short—Rocker Shaft	2	
13	1783	**Arm**—Rocker Assembly—R.H....	4	
14	1715	**Support**—Rocker Arm Shaft	4	
15	1784	**Arm**—Rocker Assembly—L.H.	4	
16	1711	**Spring**—Long—Rocker Shaft	3	
17	7140	**Shaft**—Rocker Arm	1	
18	1324	**Gasket**—Elbow	1	
19	38CBH100	**Bolt**—Elbow to Cylinder Head	2	
	38WL	**Washer**—Lock Elbow to Cylinder Head	2	

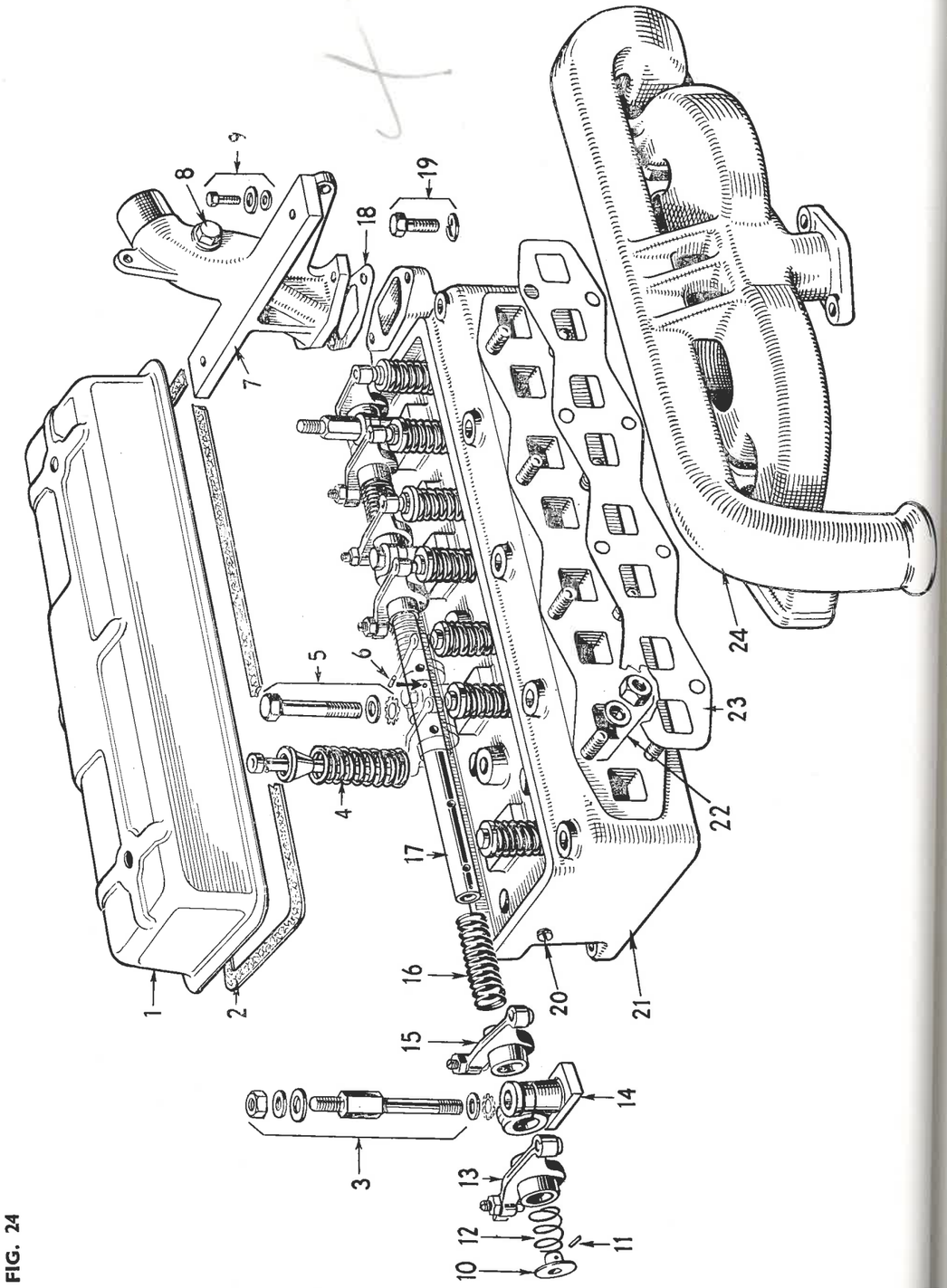

FIG. 24

Ref. No.	Part No.	Description	No. Off	Remarks
20	1624	**Plug**—Pipe	1	
21	9578	**Head**—Cylinder Assembly—With Valves ... ... **comprising :—**	1	
	1701	**Valve**—Intake and Exhaust	8	
	1707	**Spring**—Valve	8	
	1708	**Retainer**—Valve Spring	8	
	1710	**Lock**—Valve Spring Retainer	8	
	2083	**Guard**—Oil—Valve Stem—Inlet	8	
	2082	**Gasket**—Oil Guard—Inlet	8	
	9577	**Head**—Cylinder—Stripped ... ... **comprising :—**	1	
	9575	**Head**—Cylinder—Not Serviced Separately		
	1704	**Guide**—Valve	8	
	1678	**Insert**—Exhaust Valve	4	
	1697	**Tube**—Push Rod	8	
	1716	**Stud**—Rocker Arm Shaft—See Item 3	2	
	1627	**Stud**—Exhaust Manifold—See Item 22...	8	
	1624	**Plug**—Pipe—See Item 20	1	
22	1627	**Stud**—Manifold to Cylinder Head	8	
	1667	**Nut**—Brass—Manifold to Cylinder Head	8	
	1644	**Washer**—Manifold to Cylinder Head	8	
23	7144	**Gasket**—Manifold to Cylinder Head	1	
24	8598	**Manifold**—Exhaust and Intake	1	

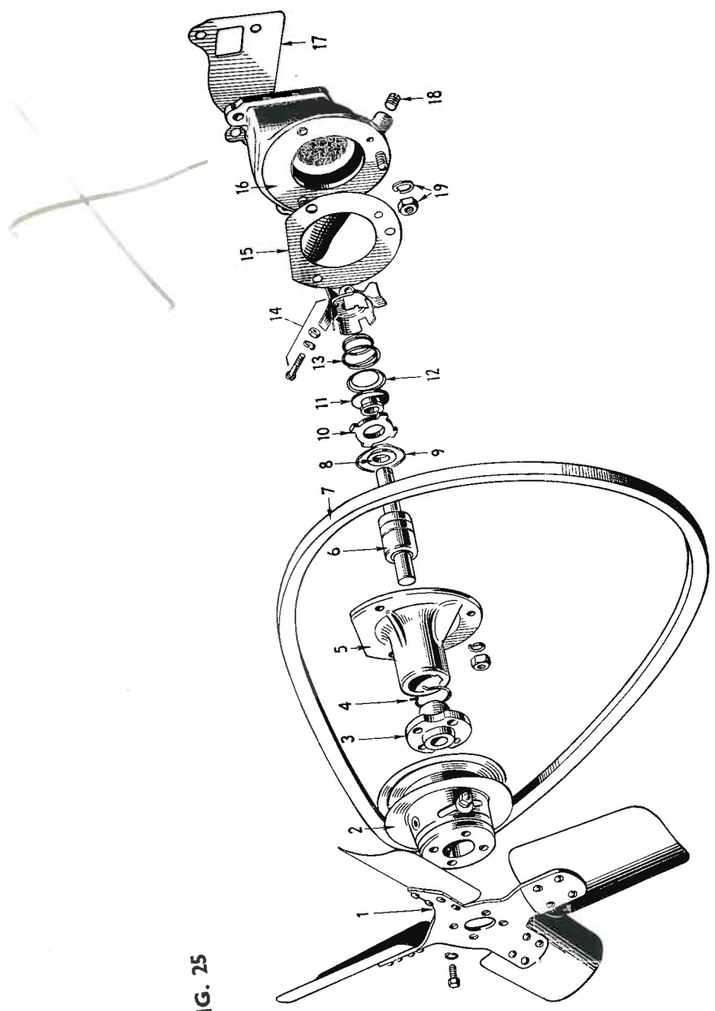

FIG. 25

Ref. No.	Part No.	Description	No. Off	Remarks
		FIG. 25 WATER PUMP ASSEMBLY AND FAN TE20.		
	7148	**Water Pump Assembly**—Complete—Comprising Items 3 through 19, excepting Items 7 and 17	1	
	7143	**Works Assembly**—Water Pump—Comprising Items 3 through 14, excepting Item 7	1	
1	8552	**Fan Assembly**—Riveted	1	
	1663	**Screw** and **Lockwasher** Assembly	4	
2	4238	**Pulley Assembly**—Fan	1	
3	1764	**Hub**—Fan	1	
4	1762	**Ring**—Snap—Bearing—Retaining	1	
5	4234	**Support Assembly**—Pump Drive Shaft	1	
6	1757	**Shaft** and **Bearing Assembly**	1	
7	8553	**Belt**—Fan	1	
8	1763	**Slinger**	1	
9	1761	**Ring**—Snap—Seal—Retaining	1	
10, 11, 12, 13	4237	**Seal Assembly**—Items Not Serviced Separately	1	
14	4235	**Impellor Assembly**	1	
		comprising :—		
	1758	**Impellor**—Not Serviced Separately		
	1760	**Housing**—Seal—Not Serviced Separately		
	1657	**Screw**—Impellor to Shaft	1	
	1661	**Nut**—Impellor to Shaft	1	
	1671	**Washer**—Impellor to Shaft	1	
	1761	**Ring**—Item 9	1	
15	1756	**Gasket**—Support to Body	1	
16	7149	**Body Assembly**—Water Pump	1	
		comprising :—		
	7150	**Body**—Not Serviced Separately		
	1658	**Stud**—Support to Body	2	
	1624	**Plug**—Pipe—Item 18	1	
17	4236	**Gasket**—Water Pump to Cylinder	1	
18	1624	**Plug**—Pipe—Water Pump Body	1	
19	1643	**Nut**—Support to Body and Body to Cylinder Block... ...	5	
	38WL	**Washer**—Lock	5	

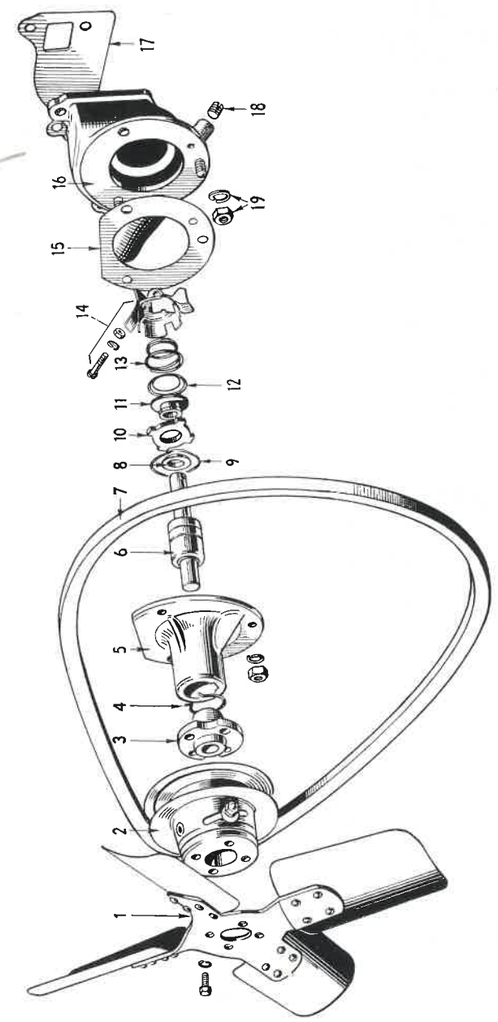

FIG. 25

Ref. No.	Part No.	Description	No. Off	Remarks
		FIG. 25 WATER PUMP ASSEMBLY AND FAN TE20.		
	7148	**Water Pump Assembly**—Complete—Comprising Items 3 through 19, excepting Items 7 and 17	1	
	7143	**Works Assembly**—Water Pump—Comprising Items 3 through 14, excepting Item 7	1	
1	8552	**Fan Assembly**—Riveted	1	
	1663	**Screw** and **Lockwasher** Assembly	4	
2	4238	**Pulley Assembly**—Fan	1	
3	1764	**Hub**—Fan	1	
4	1762	**Ring**—Snap—Bearing—Retaining	1	
5	4234	**Support Assembly**—Pump Drive Shaft	1	
6	1757	**Shaft** and **Bearing Assembly**	1	
7	8553	**Belt**—Fan	1	
8	1763	**Slinger**	1	
9	1761	**Ring**—Snap—Seal—Retaining	1	
10, 11, 12, 13	4237	**Seal Assembly**—Items Not Serviced Separately	1	
14	4235	**Impellor Assembly**	1	
		comprising :—		
	1758	**Impellor**—Not Serviced Separately		
	1760	**Housing**—Seal—Not Serviced Separately		
	1657	**Screw**—Impellor to Shaft	1	
	1661	**Nut**—Impellor to Shaft	1	
	1671	**Washer**—Impellor to Shaft	1	
	1761	**Ring**—Item 9	1	
15	1756	**Gasket**—Support to Body	1	
16	7149	**Body Assembly**—Water Pump	1	
		comprising :—		
	7150	**Body**—Not Serviced Separately		
	1658	**Stud**—Support to Body	2	
	1624	**Plug**—Pipe—Item 18	1	
17	4236	**Gasket**—Water Pump to Cylinder	1	
18	1624	**Plug**—Pipe—Water Pump Body	1	
19	1643	**Nut**—Support to Body and Body to Cylinder Block... ...	5	
	38WL	**Washer**—Lock	5	

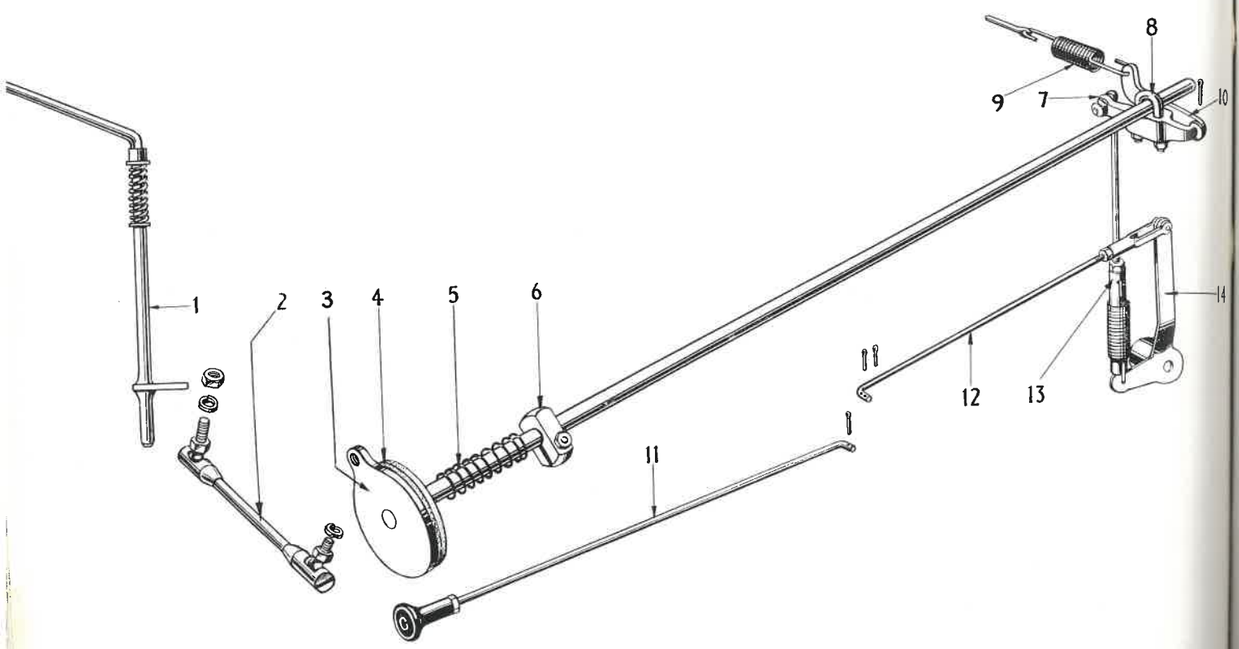

FIG. 26

Ref. No.	Part No.	Description	No. Off	Remarks
		FIG. 26 THROTTLE CONTROLS		
1	7213	**Control**—Throttle Assembly—Steering Column	1	
		comprising :—		
	4156	**Rod**—Not Serviced Separately		
	1371	**Bush**—Not Serviced Separately		
	1366	**Spring**—Not Serviced Separately	1	
	38WFH	**Washer**—Flat—Heavy	1	
	O9PC62	**Pin**—Cotter		
	1373	**Arm**—Throttle Rod—Not Serviced Separately	1	
2	2050	**Rod**—Link Assembly	1	
	25CNHJ	**Nut**—Lock	2	
	25WL	**Washer**—Lock	1	
3	2113	**Rod**—Throttle Assembly—TE20	1	
	2112	**Rod**—Throttle Assembly—TEA20	1	
4	1917	**Washer**—Throttle Rod	1	
	1448	**Washer**—Heavy	1	

Ref. No.	Part No.	Description	No. Off	Remarks
5	1366	**Spring**—Throttle Control	1	
6	1445	**Clamp**—Throttle Rod	1	
	31CBH100	**Bolt**—Clamp	1	
	31CNH	**Nut**	1	
7	1446	**Lever**—Control—TE.20	1	
	1610	**Lever**—Control—TE.A.20	1	
	1379	**Joint**—Ball—Male	1	
	25CNHJ	**Nut**—Ball—Joint	1	
8	1447	**Bolt**—"U"...	1	
	31FNH	**Nut**—"U" Bolt	2	
	31WL	**Washer**—Lock	2	
9	1365	**Spring**—TE.20	1	
	1797	**Spring**—TE.A.20	1	
	12PC75	**Pin**—Cotter	1	
10	1370	**Link**	1	
	O9PC62	**Pin**—Cotter	1	
11	4169	**Rod**—Choke Control Assembly—TE.20	1	
		comprising :—		
	4168	**Rod**—Not Serviced Separately		
	1428	**Knob**		
	19FNX	**Nut**—Lock	1	
	06PC38	**Pin**—Cotter	1	
	4254	**Rod**—Choke Control Assembly—TE.A.20	1	
		comprising :—		
	4255	**Rod**—Not Serviced Separately		
	1428	**Knob**		
	19FNX	**Nut**—Lock	1	
	06PC38	**Pin**—Cotter	1	
12	1480	**Rod**—Tie—Throttle Control—TE.20	1	
	1479	**End**—Fork—TE.20	1	
	25FNH	**Nut**—Locking—TE.20	1	
	25PS68	**Pin**—Clevis—TE.20	1	
	06PC50	**Pin**—Cotter—TE.20	3	
	58061	**Rod**—Tie—Throttle Control—TE.A.20	1	
	58062	**End**—Fork—TE.A.20	1	
	58077	**Pin**—Clevis—TE.A.20	1	
	25WF	**Washer**—TE.A.20	3	
	06PC75	**Pin**—Split—TE.A.20	3	
13	1375	**Rod**—Arm—Governor Lever—TE.20	1	
	1912	**Rod**—Arm—Governor Lever—TE.A.20	1	
	1380	**Joint**—Ball—Female	1	
	25CNHJ	**Nut**—Lock	1	
	1377	**Plunger**	1	
	1391	**Spring**—TE.A.20	1	
	2199	**Spring**—TE.20	1	
14	4242	**Lever Assembly**—Governor—TE.20	1	
	57088	**Lever Assembly**—Governor—TE.A.20 (see fig. 35). ...	1	

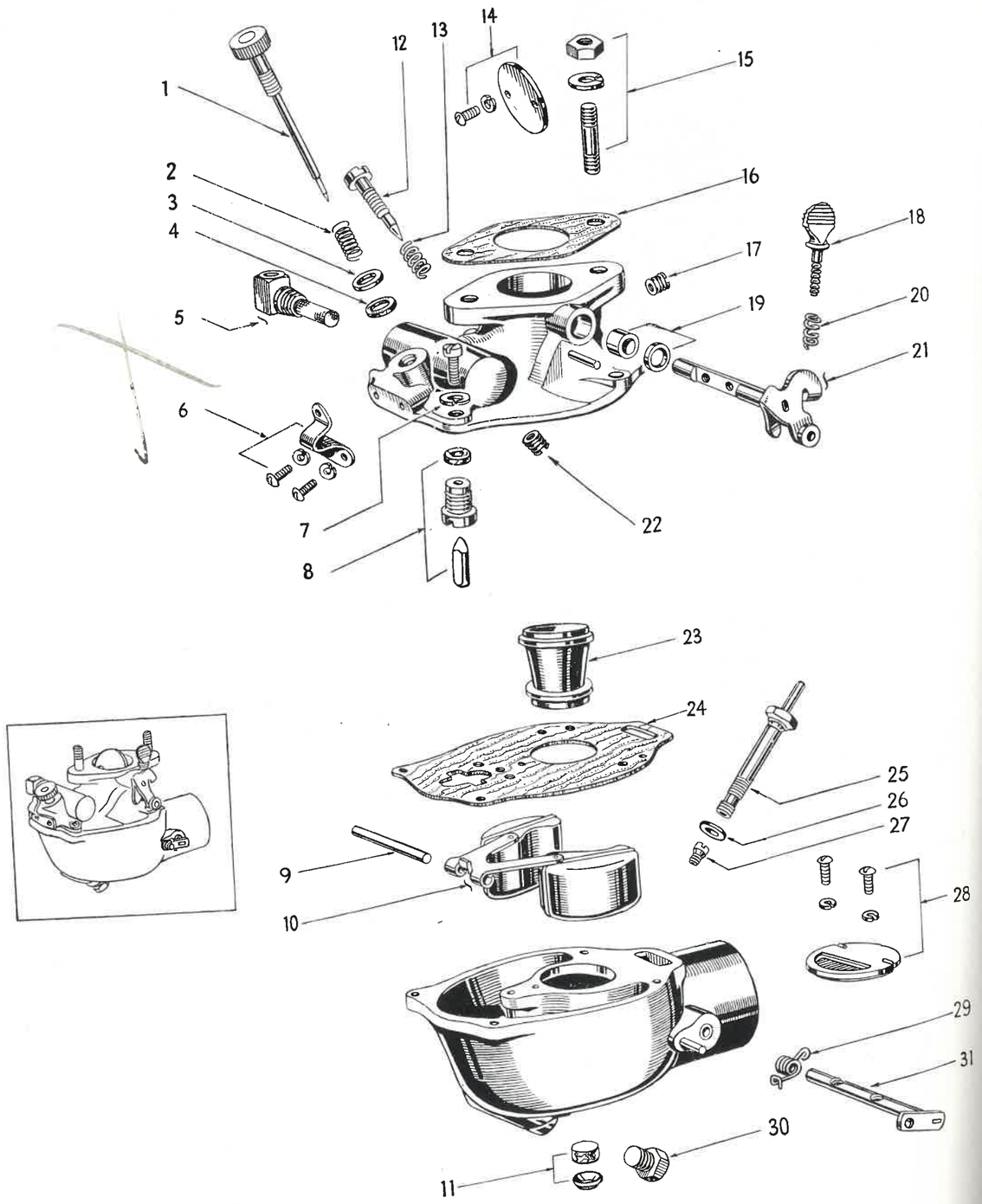

FIG. 27

Ref. No.	Part No.	Description	No. Off	Remarks
		FIG. 27 CARBURETTOR ASSEMBLY TE 20.		
	7145	**Carburettor Assembly**—Comprising Items 1 through 31	1	
1	1851	**Needle Assembly**—High Speed	1	
2	1841	**Spring**—High Speed Needle	1	
3	1847	**Washer**—Plain—High Speed Needle	1	
4	1849	**Gasket**—High Speed Needle	1	
5	1846	**Elbow** and **Screen Assembly**—Petrol Inlet	1	
6	1839	**Ratchet**—High Speed Adjusting	1	
	1859	**Screw** and **Lockwasher**—Ratchet	2	
7	1835	**Screw** and **Lockwasher**—Throttle Body to Bowl	4	
8	1850	**Valve**—Float—Seat and Gasket Assembly (Matched) ...	1	
		comprising :—		
	1852	**Gasket**	1	
		Valve Float—Not Serviced Separately		
		Seat—Float Valve—Not Serviced Separately		
9	1848	**Shaft**—Float Lever	1	
	1834	**Body Assembly**—Carburettor	1	
10	1845	**Float** and **Lever Assembly**	1	
11	1869	**Strainer**—Felt Drain	1	
12	1842	**Needle**—Idle Adjusting	1	
13	1855	**Spring**—Idle Needle	1	
14	1859	**Screw** and **Lockwasher**—Throttle Fly	2	
	1857	**Fly**—Throttle	1	
15	31CNH	**Nut**—Carburettor to Manifold	2	
	1669	**Lockwasher**	2	
	1674	**Stud**	2	
16	1668	**Gasket**—Carburettor to Manifold	1	
	4267	**Body Assembly**—Throttle	1	
17	1853	**Screw**—Idle Drilling ¼" × 28	1	
18	1865	**Screw**—Throttle Stop	1	

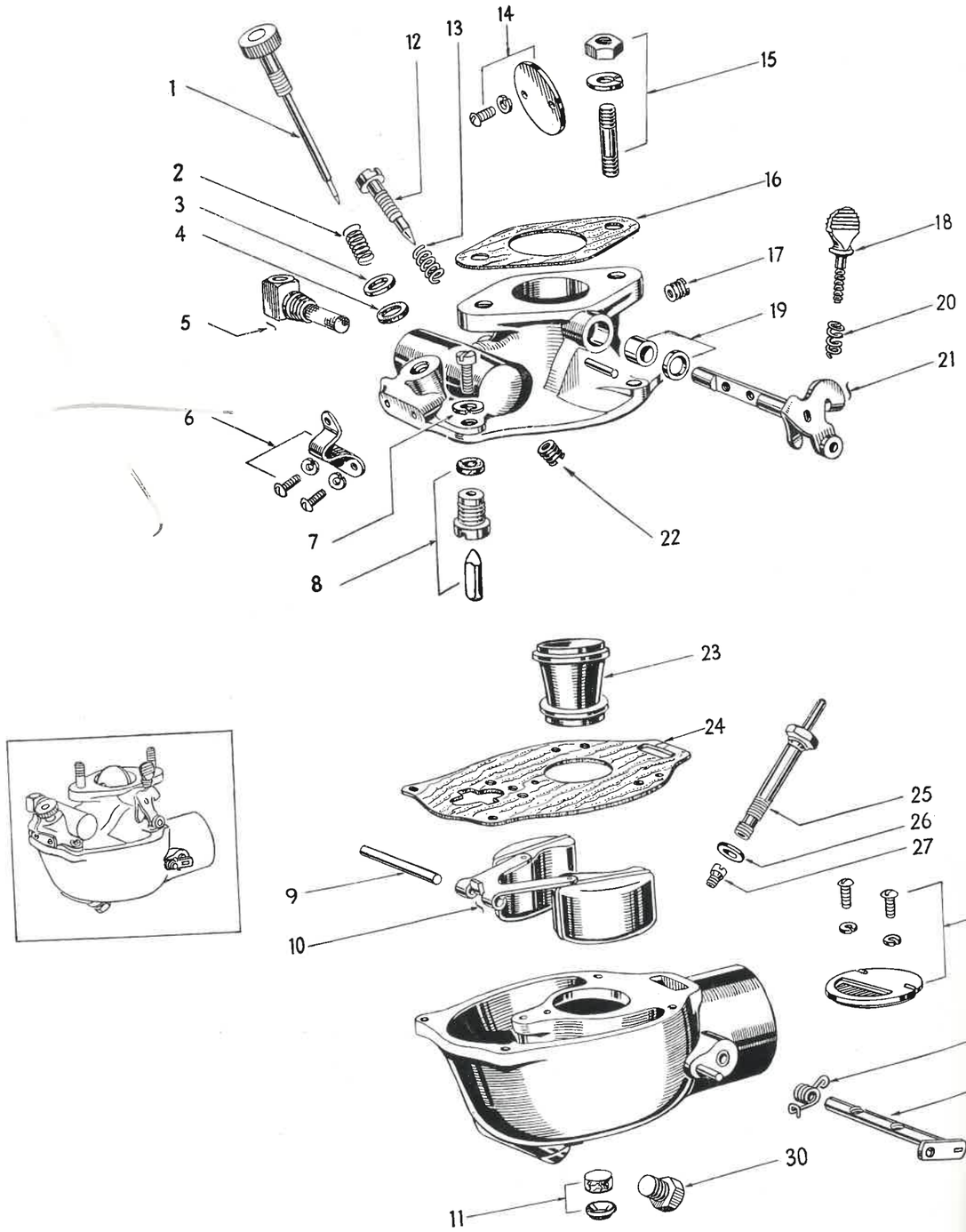

FIG. 27

Ref. No.	Part No.	Description	No. Off	Remarks
19	1862 1866	**Retainer**—Throttle Shaft Packing ... ... **Packing**—Throttle Shaft	1 1	
20	1860	**Spring**—Throttle Stop Screw	1	
21	1856	**Shaft** and **Lever Assembly**—Throttle	1	
22	1863	**Jet**—Idle—Flow 99-103 c.c.	1	
23	1858	**Venturi** $\frac{5}{8}$" dia. Throat	1	
24	1836	**Gasket**—Throttle Body to Bowl	1	
25	1837	**Nozzle**—Carburettor—Main	1	
26	1864	**Gasket**—Main Nozzle	1	
27	1838	**Jet**—Power	1	
28	1854 1844	**Screw** and **Lockwasher**—Choke Fly Assembly ... ... **Fly**—Choke Assembly	2 1	
29	1840	**Spring**—Choke Return	1	
30	1871	**Plug**—Bowl Drain	1	
31	1843 1861 1867 1870 1872	**Shaft** and **Lever Assembly**—Choke ... ... **Cup**—Throttle Shaft—Not Illustrated ... ... **Packing**—Choke Shaft—Not Illustrated ... ... **Retainer**—Packing—Choker Shaft—Not Illustrated .. **Gaskets**—Service Kit—Not Illustrated	1 1 1 1 1	

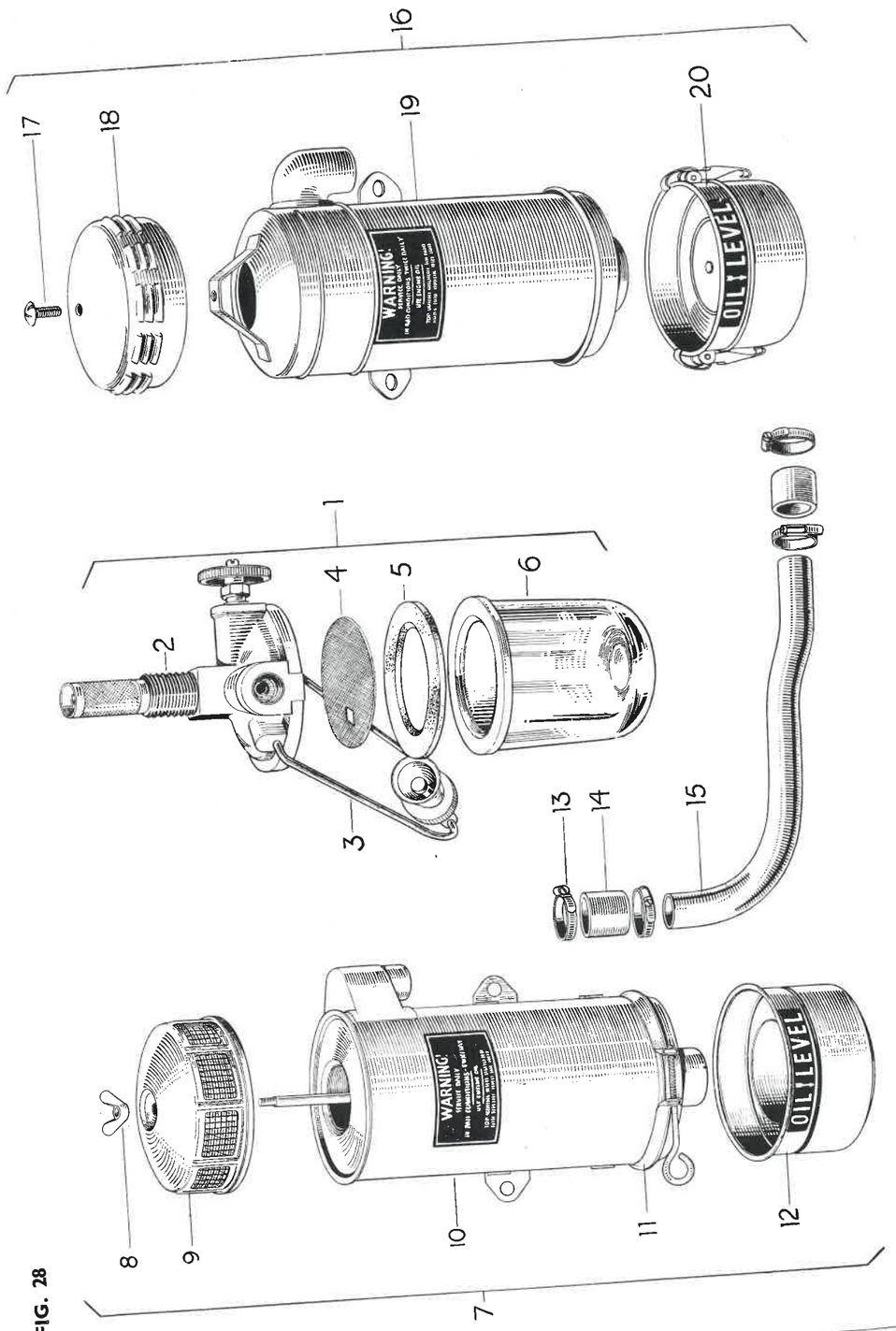

FIG. 28

Ref. No.	Part No.	Description	No. Off	Remarks
		FIG. 28 FUEL VALVE, AIR CLEANER and RELATED PARTS. TE.20.		
1	7110	**Fuel Valve** and **Sediment Bowl Assembly**—Comprising Items 2 through 6. TE.20 & TE.A.20	1	
2	7059	**Upper Casting**	1	
	1203	**Fuel Valve** and **Gland Assembly**	1	
3	1209	**Retainer**—Filter Bowl	1	
4	1206	**Gauze**—Filter	1	
5	1205	**Gasket**—Filter	1	
6	1207	**Bowl**—Filter	1	
7	7158	**Air-Cleaner Assembly**—A.C.—Sphinx (Short Type) Comprising Items 8 through 12	1	
8	1807	**Nut**—Wing	1	
9	4260	**Cover**—Filter	1	
10	4274	**Body** and **Filter Element** (Short)	1	
11	4262	**Clamp**—Oil Container	1	
12	4281	**Container**—Oil (with Plate)	1	
13	1332	**Clip**—Air Cleaner Hose	4	
14	1326	**Hose**—Air Cleaner	2	
15	7101	**Pipe**—Air Cleaner to Carburettor	1	
16	7161	**Air Cleaner Assembly**—Burgess (Short Type) Comprising Items 17 through 20	1	
17	1877	**Screw**—Set—Cover and Filter	1	
18	4277	**Cover**—Filter	1	
19	4276	**Body** and **Filter Element** (Short)	1	
20	4280	**Container**—Oil—With Clamps and Plate	1	
		Not Illustrated		
	9592	**Petrol Pipe Assembly**—Tank to Carburettor—TE.20 ...	1	1st 8,200 Tractors only
	9593	**Petrol Pipe Assembly**—Tank to Carburettor—TE.20 ...	1	8,201st. and future.
	1813	**Clip**—Petrol Pipe...	1	

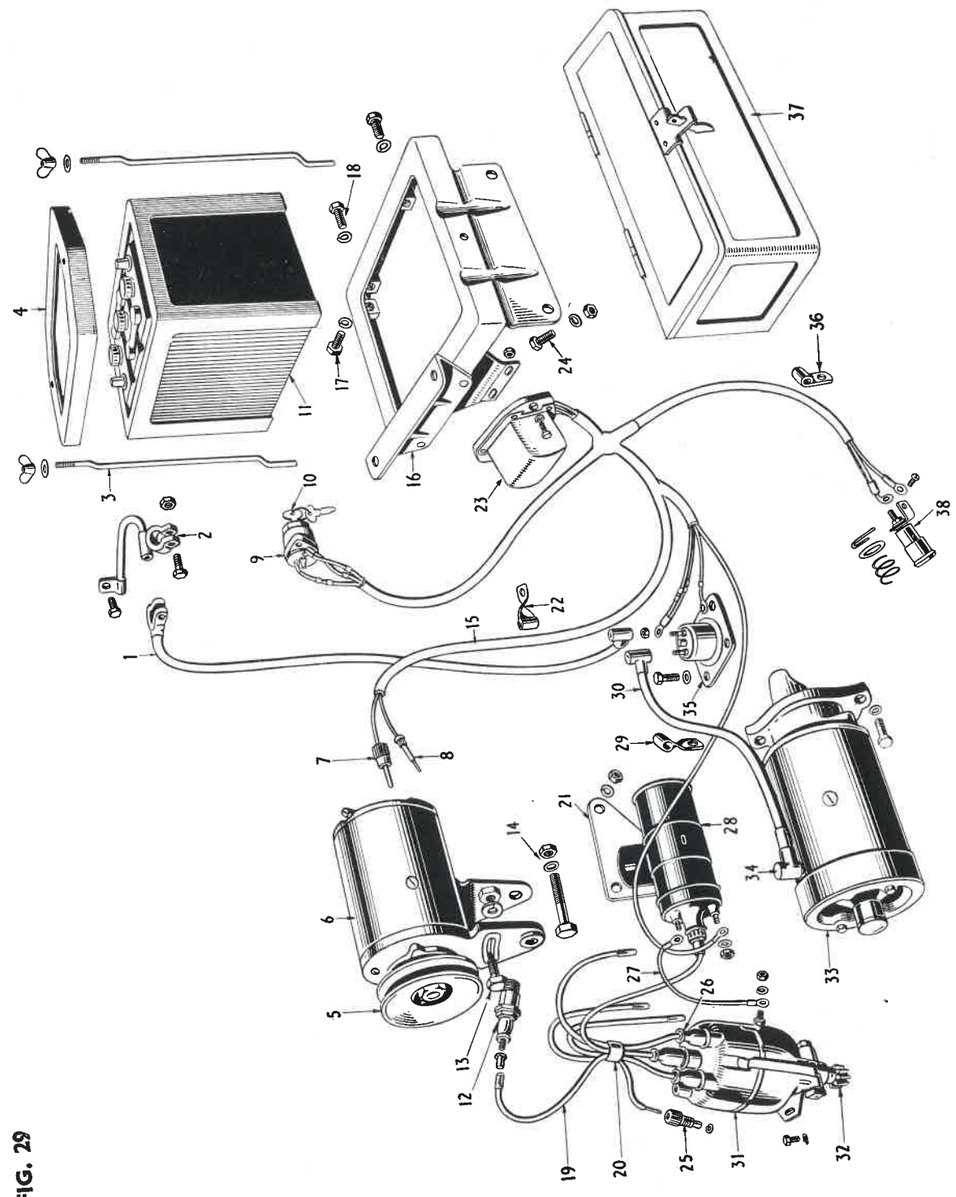

FIG. 29

Ref. No.	Part No.	Description	No. Off	Remarks
		FIG. 29 ELECTRICAL EQUIPMENT COMPLETE WITH WIRING		
1	* 856023	**Lead**—Negative Battery to Starter Switch	1	1st 45,758 Trct's only.
	* 810823	**Lead**—Negative Battery to Starter Switch	1	45,759th Tract. & Subs.
2	* 972733	**Lead**—Positive Battery to Earth	1	1st 45,758 Trct's only.
	* 974373	**Lead**—Positive Battery to Earth	1	45,759th Tract. & Subs.
	* 4188033	**Bolt**—Battery Lug	2	1st 45,758 Trct's only.
	* 4188035	**Nut**—Battery Lug Bolt	2	1st 45,758 Trct's only.
	* 186111	**Screw**—Parker Kalon	2	45,759th Tract. & Subs.
3	4134	**Bolt**—Battery Anchorage	2	
	1262	**Nut**—Wing—Battery Anchorage	2	
	25WF	**Washer**—Flat	2	
4	7094	**Frame**—Top—Battery Platform	1	
5	* 228469	**Pulley**—Dynamo—TE.20	1	
	56837	**Pulley**—Dynamo—TE.A.20	1	
	60561	**Washer**– Dynamo Pulley—TE.A.20	1	
6	* 22420B	**Dynamo** 6v.C.V.C.	1	
7	* 238743	**Plug**—Positive	1	
8	* 238742	**Plug**—Field	1	
9	* 31083	**Switch**—Ignition—Includes 2 Keys 312305	1	
10	* 312305	**Key**—Ignition Switch	2	
11	* 4010370F	**Battery**—6v—Model STXFRW 13 E.6	1	
12	1325	**Plug**—Sparking 18m.m. Champion No. 7 Commercial ... Not Serviced by H. F. Ltd. purchase locally.	4	
	60379	**Cover**—Waterproof Terminal	4	
13	44CBH94	**Bolt**—Dynamo Attachment	1	
	44WL	**Washer**—Lock	1	
	44WF	**Washer**—Flat	1	
14	44CBH368	**Bolt**—Dynamo Attachment	1	
	44CNH	**Nut**	1	
	44WL	**Washer**—Lock	1	
15	* 974362	**Harness**—Main—Includes Items 7 and 8	1	
16	8565	**Platform Assembly**—Battery	1	
17	44FBH68	**Screw**—Set—Air Cleaner to Battery Platform	2	
	44WL	**Washer**—Lock	2	
18	44FBH68	**Screw**—Set—Battery Platform to Bulkhead	2	
	44WL	**Washer**—Lock	2	
19	5520	**Wire**—H.T.—5ft. length.	1	
20	* 941834	**Cleat**—Cable—Distributor Leads	1	3 req. for TE.A.20.

Items shown * and their components serviced by Messrs. J. Lucas Ltd.

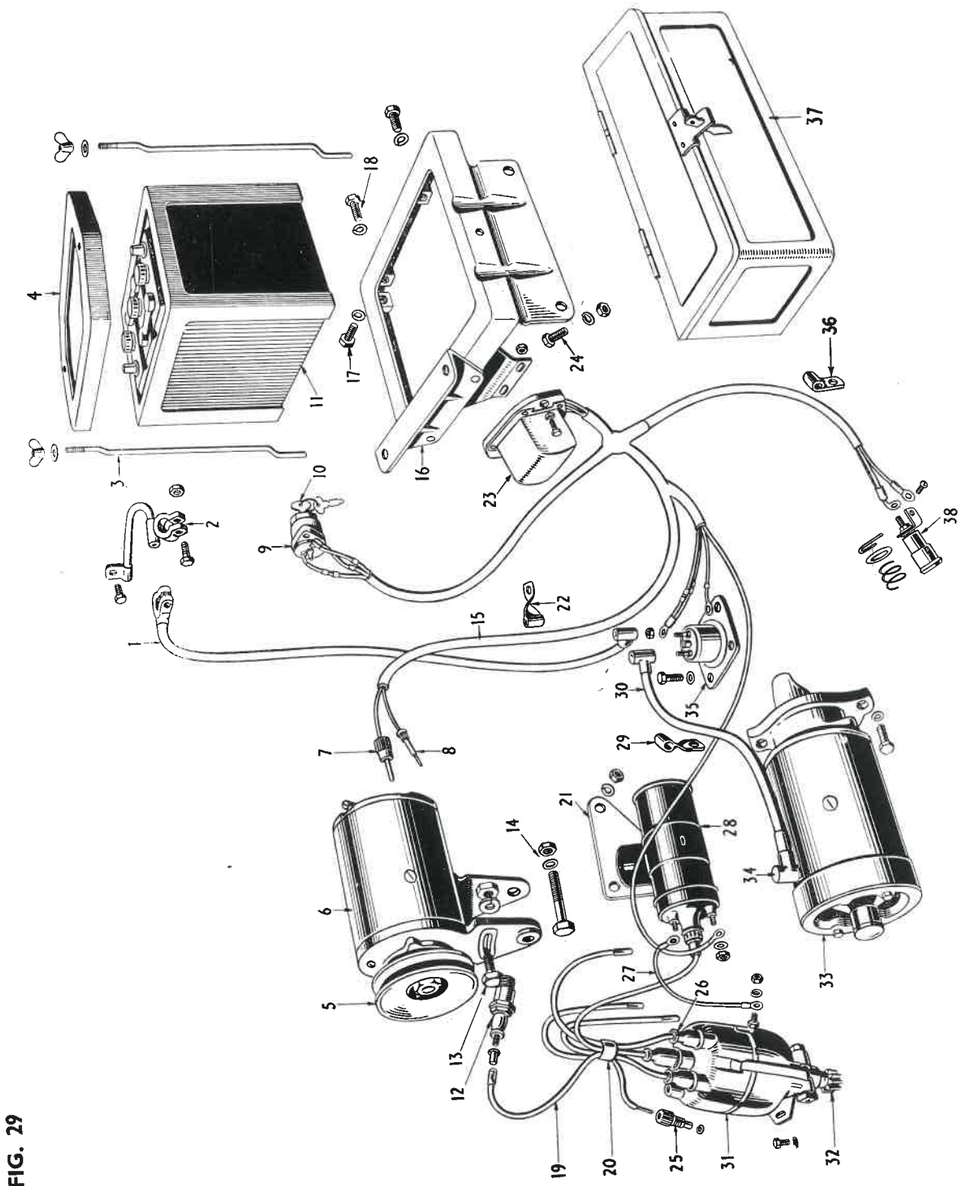

FIG. 29

Ref. No.	Part No.	Description	No. Off	Remarks
21	1420	**Bracket Assembly**—Ignition Coil	1	
	25CNH	**Nut**—Coil to Cylinder Block	3	
	25WL	**Washer**—Lock	3	
22	* 858229	**Clip**—Cable	2	
	1919	**Clip**—Cable—TE.A.20	1	1 only req. for TE.A.20
23	* 37053A	**Box**—Control—Model R.F.97	1	
	25CBH87	**Bolt**—Control Box Attachment	2	
	25CNH	**Nut**	2	
	25WL	**Washer**—Lock	2	
24	44CBH75	**Bolt**—Tool Box to Battery Platform	2	
	44CNH	**Nut**	2	
	44WL	**Washer**—Lock	2	
25	* 410600	**Nut**—Mculded—Cable Holding	5	
	* 185015	**Washer**—Split—Cable End	5	
26	60314	**Cover**—Terminal—Rubber	5	
27	* 999107	**Lead**—Coil to Distributor	1	
28	* 45014A	**Coil**—Ignition—Waist Fixed—6 volt	1	
29	* 858229	**Clip**—Cable	2	
30	* 974372	**Lead**—Starter to Starter Switch	1	
	* 40146D	**Distributor**—D3A4. Type V.139/3.—TE.A.20	1	
31	* 40084H	**Distributor**—D3A4. Type V.125.—TE.20	1	
	25CBH62	**Screw**—Distributor Attachment	1	
	25WL	**Washer**—Lock	1	
	25WF	**Washer**—Flat	1	
	* 400174	**Driver**—Screw and Point Gauge (Not Illustrated)	1	
32	1291	**Gear**—Distributor Drive	1	
	1296	**Pin**—Distributor Drive Gear	1	
33	* 25519D	**Starter**—Model M418G Type V139	1	
	60664	**Washer**—Starter Packing	as req.	
34	* 238576	**Boot**—Rubber—Starter to Starter Switch Cable	3	
35	* 76407B	**Switch**—Starter	1	
	31CBH50	**Screw Set**—Starter Switch Attachment	4	C.I. Trans. Case only
	31CBH88	**Screw Set**—Starter Switch Attachment	4	Elektron Case only
	31FNH	**Nut**—Hex.	4	Use with Studs
	31WF	**Washer**—Flat	4	
	1300	**Lever**—Toggle—Starter Switch (Not Illustrated)	1	
	1301	**Link**—Starter Switch (Not Illustrated)	1	
	31PS88	**Pin**—Clevis—Reverse Rail (Not Illustrated	1	
	31WF	**Washer**—Reverse Rail (Not Illustrated)	1	
	31PS50	**Pin**—Clevis—Lever to Link (Not Illustrated)	1	
	31PS131	**Pin**—Clevis—Link to Switch (Not Illustrated)	1	
	O9PC50	**Pin**—Cotter (Not Illustrated)	3	

Items shown * and their components serviced by Messrs. J. Lucas Ltd.

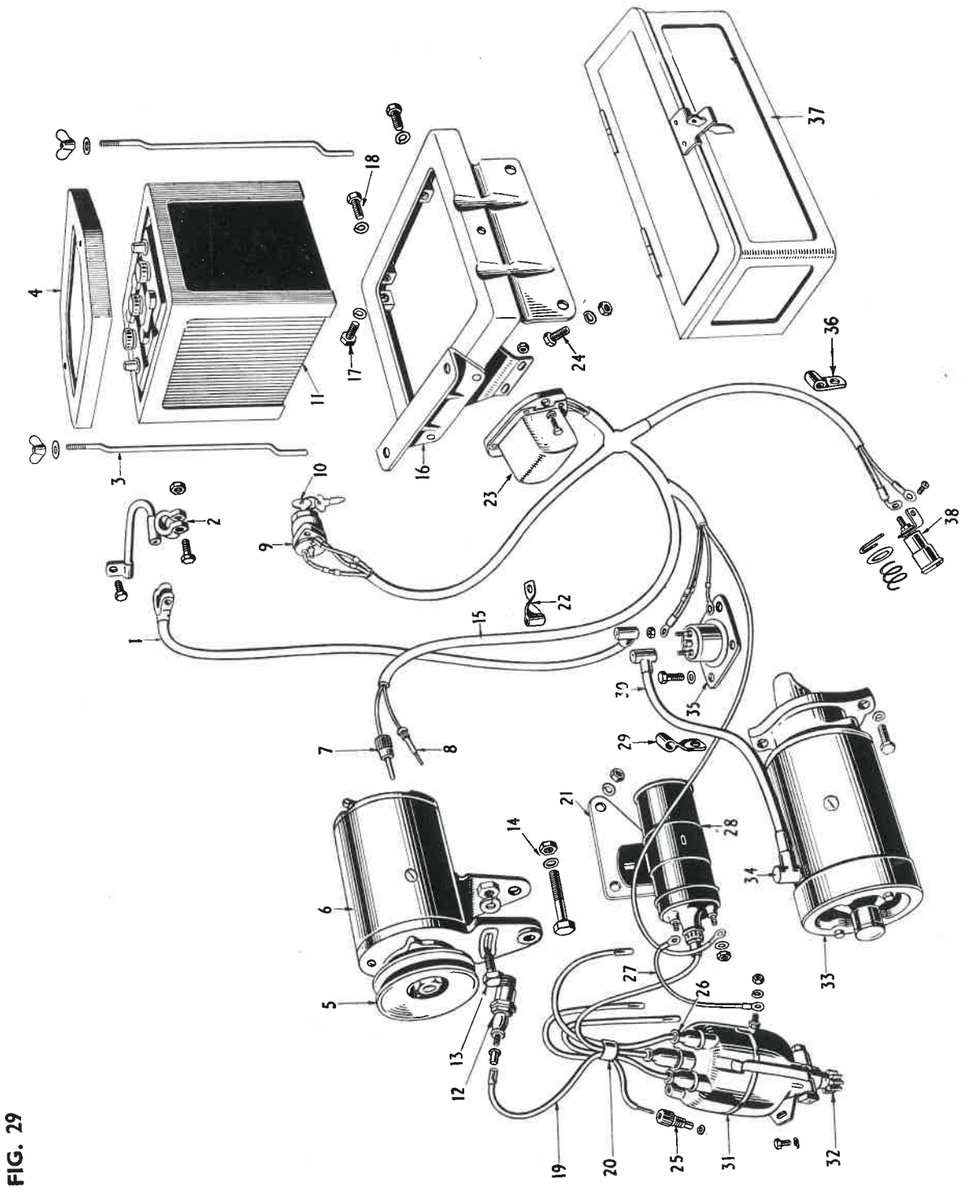

FIG. 29

Ref. No.	Part No.	Description	No. Off	Remarks
36	* 187081	**Clip**—Cable—Warning Light	1	
37	8549	**Box Assembly**—Tool	1	
	1395	**Wrench**—$\frac{5}{16}$″ × $\frac{3}{8}$″ Hex. open end (Not Illustrated) ...	1	
	1396	**Wrench**—Adjustable (Not Illustrated)	1	
	1397	**Spanner**—Tube—Plug and $\frac{7}{16}$″ Hex. (Not Illustrated) TE.20	1	
	1814	**Spanner**—Tube—Plug. TE.A.20	1	
	1398	**Bar**—Tommy (Not Illustrated)	1	
	1399	**Driver**—Screw (Not Illustrated)	1	
	1401	**Pliers** (Not Illustrated)	1	
	1449	**Spanner**—Tube $\frac{7}{16}$″ Hex. (Not Illustrated)	1	
	4161	**Wrench** $\frac{7}{16}$″ × $\frac{5}{8}$″ Hex. open end (Not Illustrated	1	
	4315	**Gun**—Grease. (Not Illustrated)	1	
	4164	**Handle**—Starting (Not Illustrated)	1	
38	* 38029B	**Light**—Ignition Warning	1	
		Not Illustrated		
	1311	**Attachment Plate Assembly**...	1	
	*414965	**Cover for Coil Lead** (H.T.)	1	
	*974371	**Cable Set**—Starter—Comprising Items 1, 2 and 30 ...	1	
	*974361	**Harness**—Wiring Complete—Comprising items 1, 2, 15, 27 and 30	1	
	44CBH100	**Bolt**—Starter fixing	2	
	44WL	**Washer**—Lock	2	
	4309	**Mat**—Battery	1	

Items shown * and their components serviced by Messrs. J. Lucas Ltd.

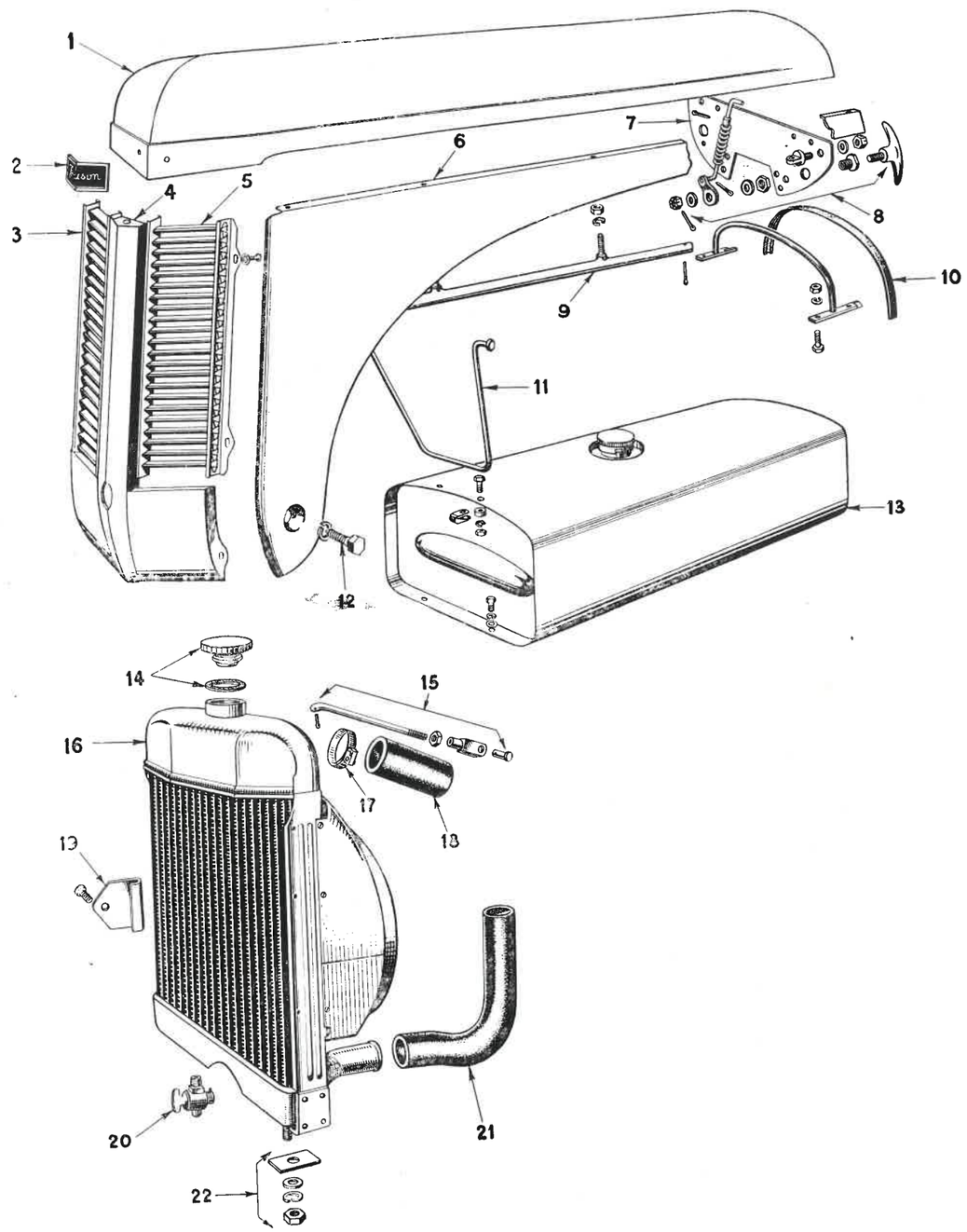

FIG. 30

Ref. No.	Part No.	Description	No. Off	Remarks
		FIG. 30 RADIATOR AND HOOD ASSEMBLY		
1	9507	**Hood Top Panel**	1	
2	1415	**Name Plate**	1	
	1450	**Special Screw**—Not Illustrated	2	
3	9524	**Grille Assembly R.H.**	1	
		comprising :—		
	9545	**Bracket L.H.**—Inner—Not Serviced Separately		
	9546	**Bracket R.H.**—Outer—Not Serviced Separately		
	9548	**Louvre**—Not Serviced Separately		
4	9533	**Assembly** of **Lower Panels** and **Centre Bar**	1	
5	9523	**Assembly Grille L.H.**	1	
		comprising :—		
	9543	**Bracket L.H.**—Inner—Not Serviced Separately		
	9544	**Bracket R.H.**—Outer—Not Serviced Separately		
	9547	**Louvre**—Not Serviced Separately		
	1360	**Screw**—Grille R.H. and L.H. to Centre Bar and Side Panel.	8	
	16WL	**Washer**—Lock	8	
	16WF	**Washer**—Flat	8	
6	9531	**Panel Assembly L.H.**	1	
	9532	**Panel Assembly R.H.**	1	
	31CBH50	**Bolt**—Side Panels to Lower Panels	4	
	31CNH	**Nut**	4	
	31WL	**Washer**—Lock	4	
7	7104	**Bulkhead**	1	
8	1429	**Handle Assembly**—includes 1430 Shaft only	2	
	1430	**Shaft Handle**—Not Serviced Separately		
	1431	**Ferrule**—Handle Assembly	2	
	1432	**Nut**—Special	2	
	1433	**Lever L.H.**	1	
	1434	**Lever R.H.**	1	
	31WF	**Washer**—Flat	2	
	31FNT	**Nut**—Slotted	2	
	O6PC50	**Pin**—Cotter	2	
	4170	**Catch Assembly L.H.**	1	
	4171	**Catch Assembly R.H.**	1	
		comprising :—		
	1435	**Catch L.H.**—Not Serviced Separately		
	1436	**Catch R.H.**—Not Serviced Separately		
	1437	**Washer**—Special—Not Serviced Separately		
	1440	**Spring**—Not Serviced Separately		
	1438	**Pivot**—Not Serviced Separately		
	1439	**Collar**—Not Serviced Separately		

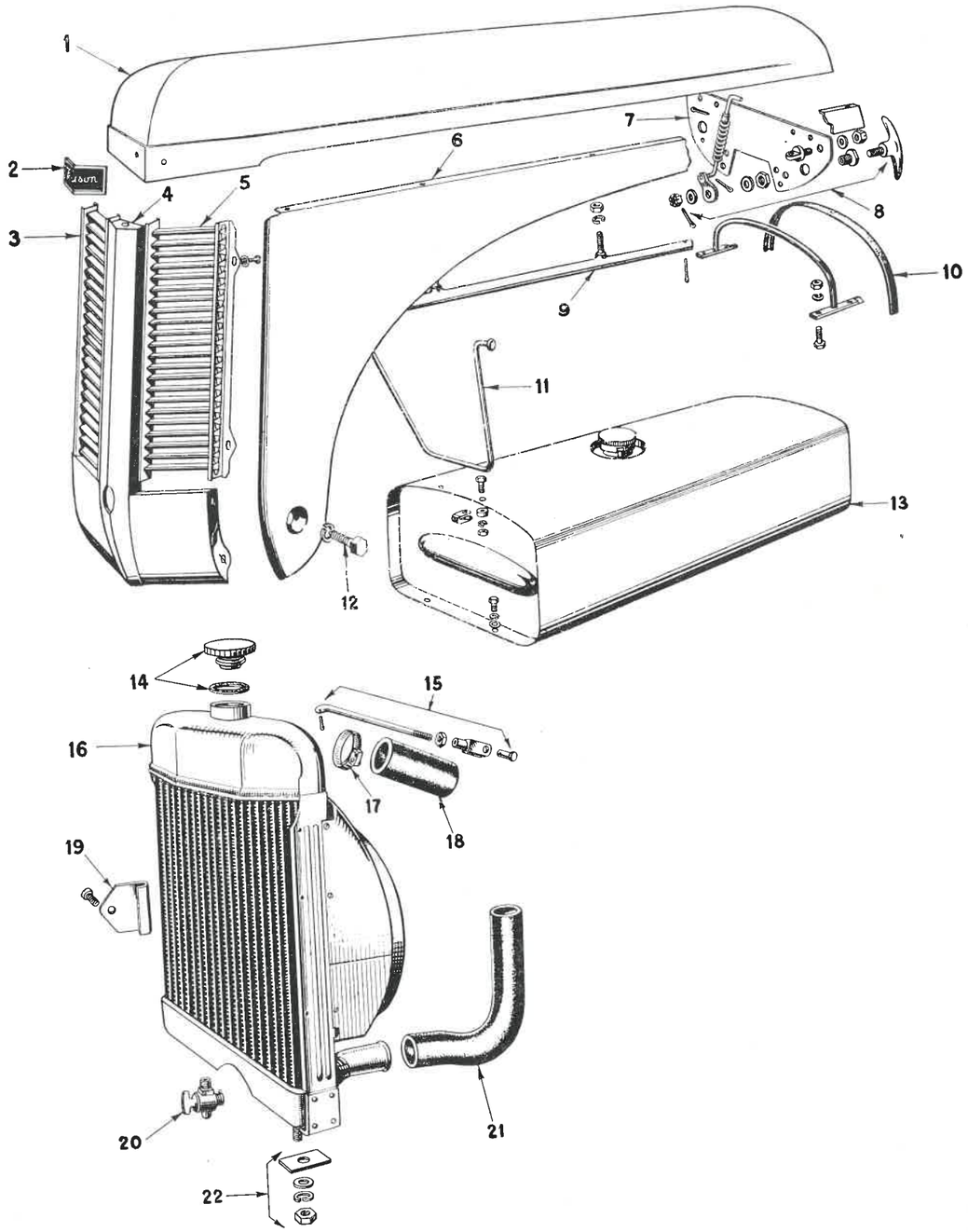

FIG. 30

Ref. No.	Part No.	Description	No. Off	Remarks
8 (*cont.*)	31WF	**Washer**—Flat—Catch to Bulkhead	2	
	31FNT	**Nut**—Slotted	2	
	O6PC87	**Pin**—Cotter	2	
	O9PC50	**Pin**—Cotter—Catch Assembly	2	
	7093	**Bracket**—Dash Support (Not Illustrated)	1	
9	4167	**Runner**—Hood Side Assembly	2	
	25FNH	**Nut**—Hex.	4	1st 250 Tractors only
	25CNH	**Nut**—Hex.	4	251st Tractor and subs.
	25WL	**Washer**—Lock	4	
	12PC100	**Pin**—Cotter	2	
10	8566	**Strap**—Hood Stiffening Assembly ... ... **comprising :—**	1	
	8573	**Strap**—Stiffening—Not Serviced Separately		
	1472	**Foot**—R.H.—Not Serviced Separately		
	1473	**Foot**—L.H.—Not Serviced Separately		
	25CBH87	**Bolt**—Hex.	4	
	25FNH	**Nut**—Hex.	4	
	25WL	**Washer**—Lock	4	
	1944	**Seal**—Rubber complete with 12 rivets (see fig. 16).	1	
11	7108	**Support**—Hood	1	
	1423	**Clip**—Hood Support	2	
	1424	**Packing**	2	
	25FBH87	**Bolt**	2	
	25FNH	**Nut**—Hex.	2	
	25WL	**Washer**—Lock	2	
	16FSR62	**Screw**—Top Panel to Centre Bar	1	
	16WL	**Washer**—Lock	1	
	16WF	**Washer**—Flat	1	
	25CBH87	**Bolt**—Hex.—Top Panel to Side Panel...	4	
	25CNH	**Nut**—Hex.	4	
	25WL	**Washer**—Lock	4	
12	1364	**Screw**—Shoulder	2	
13	9623	**Fuel Tank Assembly**—includes 1897 Filler Cap	1	
	1897	**Filler Cap** complete with **Wire** and **Chain** (Screw type) ...	1	
	31FBH62	**Screw**—Set—Fuel Tank Attachment	4	2 off 1st 200 Tractors
	31CBH62	**Screw**—Set—Fuel Tank Attachment (Front)	2	1st 200 Tractors only
	31WF	**Washer**—Flat	4	
	31WL	**Washer**—Lock	4	
	1564	**Filler Cap** complete with **Wire** and **Chain** (2 Turn type)	1	1st 25,000 Tractors only
14	4153	**Filler Cap**—Radiator	1	
	1940	**Gasket**—Filler Cap	1	
15	1567	**Rod**—Radiator Tie—TE.A.20	1	
	1782	**Rod**—Radiator Tie—TE.20	1	
	O9PC50	**Pin**—Cotter	3	
	31WF	**Washer**—Flat	1	
	31WFH	**Washer**—Heavy—Flat	as req.	

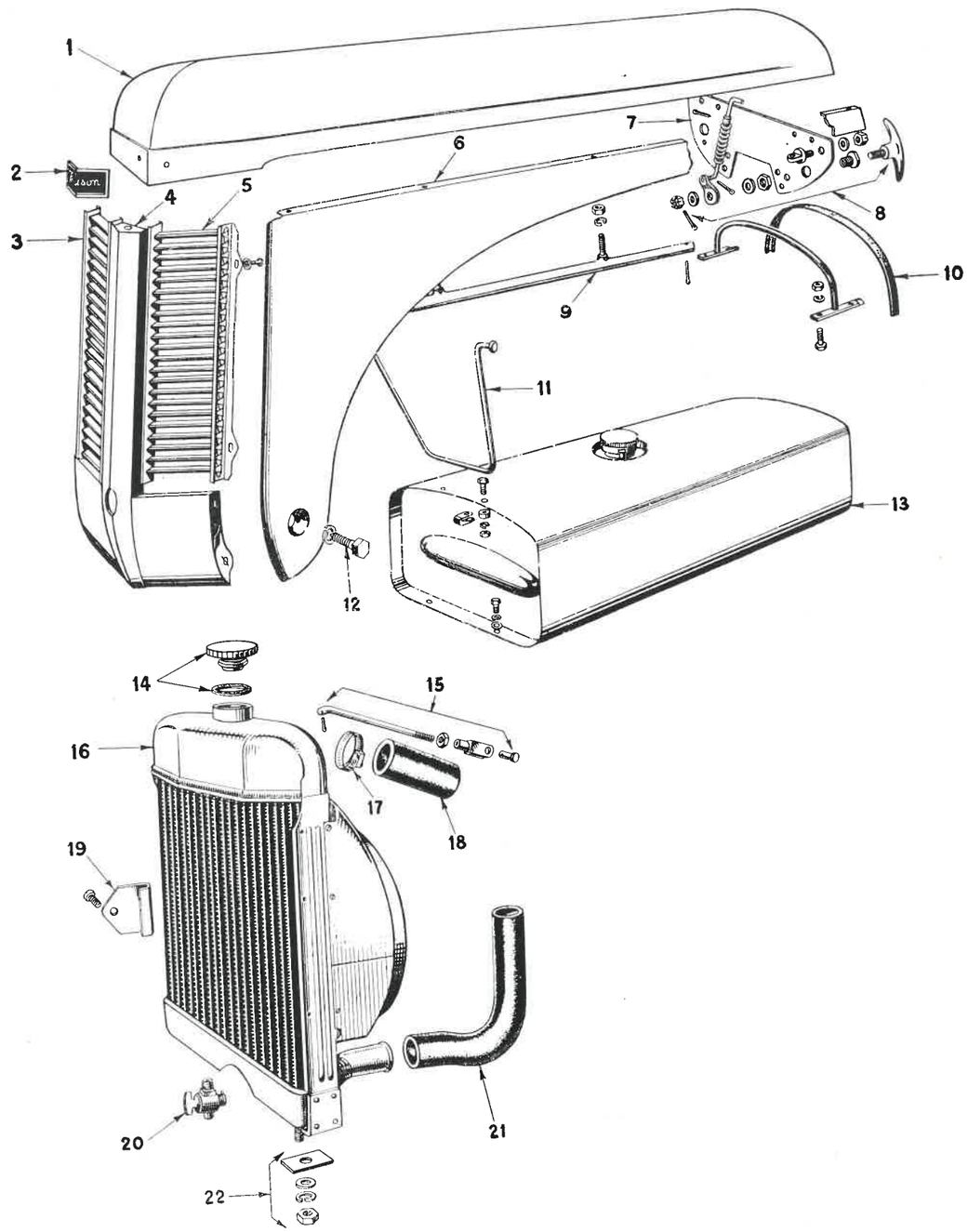

FIG. 30

Ref. No.	Part No.	Description	No. Off	Remarks
16	9589	**Radiator**—TE.20	1	
	9583	**Radiator**—TE.A.20	1	
	8555	**Cowl**—TE.20	1	
	9582	**Cowl**—TE.A.20	1	
	1941	**Screw**—Self tapping—Cowl to Radiator	7	
	4153	**Filler Cap**—see item 14	1	
	1333	**Cock**—Drain—see item 20	1	
17	2071	**Clip**—Pipe	2	
	2072	**Clip**—Pipe	2	
18	1337	**Hose**—Top $1\frac{1}{2}''$ I/D × $1\frac{7}{8}''$ O/D × 5.12″—TE.20	1	
	1568	**Hose**—Top $1\frac{1}{2}''$ I/D × $1\frac{7}{8}''$ O/D × 4.10″—TE.A.20	1	
19	1809	**Plate**—Cover	1	
	1941	**Screw**—Self tapping	1	
20	1333	**Cock**—Drain	1	
21	7102	**Hose**—Bottom $1\frac{1}{2}''$ I/D × $1\frac{7}{8}''$ O/D—TE.20	1	
	7126	**Hose**—Bottom $1\frac{1}{2}''$ I/D × $1\frac{7}{8}''$ O/D—TE.A.20	1	
22	1334	**Bolt**—Radiator Support (Not Serviced Separately)		
	44CNH	**Nut**—Radiator Support	2	
	44WL	**Washer**—Lock	2	
	1338	**Packing**—Anti Squeak	2	
	44WFH	**Washer**—Heavy—Flat	2	
		Not Illustrated		
	44FBH112	**Bolt**—Bulkhead to Steering Housing	2	
	44WL	**Washer**—Lock	2	
	44FNH	**Nut**	2	
	4295	**Thermostat**—TE.20	1	

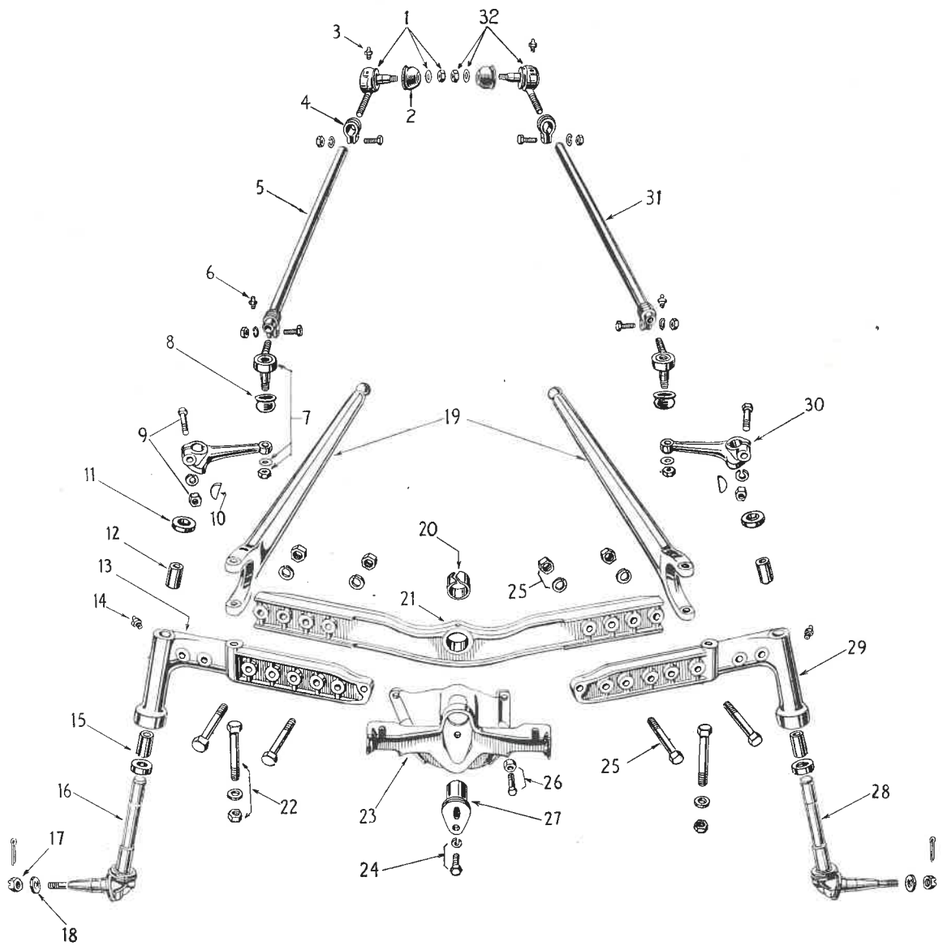

FIG. 31

Ref. No.	Part No.	Description	No. Off	Remarks
		FIG. 31 **FRONT AXLE and RELATED PARTS**		
1	1454	**Socket Assembly**—Rear R.H. including :—	1	
	50FNHJ	**Nut**	1	
	25SLF	**Lubricator**	1	
	1886	**Boot**—Rubber	1	
	50WF	**Washer**—(Not included in assembly)	1	
		Alternatively :—		
	1979	**Socket Assembly**—Rear R.H. including :—	1	
	50FNHJ	**Nut**	1	
	25SLF	**Lubricator**	1	
	1923	**Boot**—Rubber	1	
	50WF	**Washer**—(Not included in assembly)	1	
2	1886	**Boot**—Rubber	1	
	1923	**Boot**—Rubber	1	
3	25SLF	**Lubricator**—Socket Assembly	2	
4	1181	**Clamp**—Steering Drag Link R.H. & L.H.	4	Use with 7050 and 7051
	31FBH150	**Bolt**—Drag Link Clamp	4	
	1984	**Clamp**—Steering Drag Link R.H. & L.H.	4	Use with 7191 and 7192
	31FBH125	**Bolt**—Drag Link Clamp	4	
	31FNH	**Nut**	4	
	31WL	**Washer**—Lock	4	
5	7050	**Link Assembly**—Steering Drag R.H.	1	Complete with Sockets and Clamps.
		Alternatively :—		
	7192	**Link Assembly**—Steering Drag R.H.	1	
6	25SLF	**Lubricator**—Socket Assembly	2	
7	1156	**Socket Assembly**—Front R.H. & L.H. including :—	2	
	50FNHJ	**Nut**	2	
	25SLF	**Lubricator**	2	
	1887	**Boot**—Rubber	2	
	1888	**Circlip**	2	
	50WF	**Washer**—(Not included in assembly)	2	
		Alternatively :—		
	1978	**Socket Assembly**—Front R.H. & L.H. including :—	2	
	50FNHJ	**Nut**	2	
	25SLF	**Lubricator**	2	
	1923	**Boot**—Rubber	2	
	50WF	**Washer**—(Not included in assembly)	2	
8	1887	**Boot**—Rubber	2	
	1888	**Circlip**—(Not illustrated)	2	
	1923	**Boot**—Rubber	2	

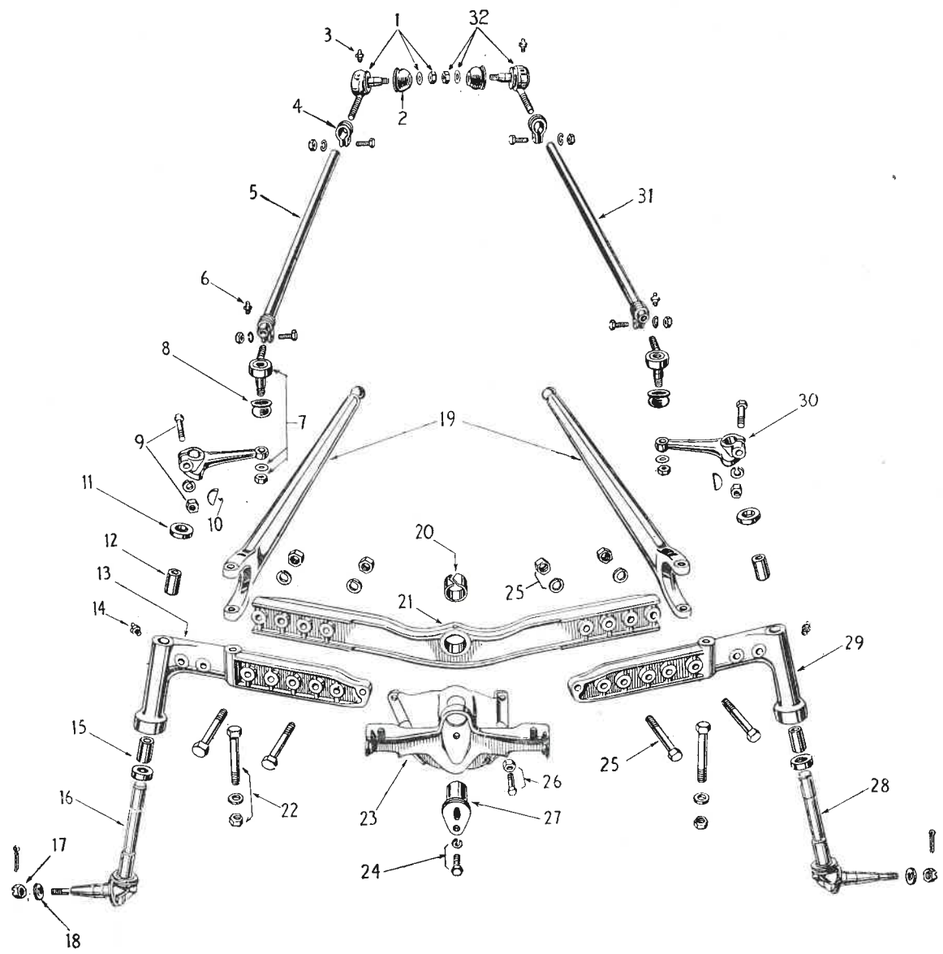

FIG. 31

Ref. No.	Part No.	Description	No. Off	Remarks
9	4090	**Arm Spindle**	1	
	44FBH262	**Bolt**—Spindle Arm	1	
	44FNH	**Nut**	1	
	44WL	**Washer**—Lock	1	
10	1476	**Key**—Woodruff	2	
11	1509	**Seal**—Steering Arm	2	
12	1128	**Bushing**—Spindle—See Items 13 and 29	4	
13	8512	**Axle Assembly**—Front—R.H.	1	
		comprising :—		
	8514	**Axle**—Not Serviced Separately...		
	1128	**Bushing**	2	
14	12PLF	**Lubricator**	2	
15	1110	**Bearing**—Spindle	2	
16	8517	**Spindle**—Front Axle—R.H.	1	1 to 49,998 & 52,497 to 52,566.
	8644	**Spindle**—Front Axle—R.H.	1	49,999 to 52,496 & 52,567 to 130,000.
17	1165	**Nut**—Castle—Spindle	2	
	16PC125	**Pin**—Cotter	2	
18	1126	**Washer**—Bearing Retainer	2	
19	7055	**Rod**—Radius	2	
20	1127	**Bushing**—Centre...	1	
21	8506	**Axle**—Front—Centre	1	
		comprising :—		
	8516	**Beam**—Front Axle—Not Serviced Separately		
	1127	**Bushing**—See Item 20	1	
22	62FBH531	**Bolt**—Radius Rod to Axle	2	
	62FNH	**Nut**	2	
	62WFH	**Washer**—Flat Heavy	2	
23	8559	**Support Assembly**—Engine & Radiator TE.20	1	
	8617	**Support Assembly**—Engine & Radiator TE.A.20	1	
24	50FBH112	**Bolt**—Front Axle Pin	1	
	50WL	**Washer**—Lock	1	
25	62FBH300	**Bolt**—Centre to R.H. and L.H. Axles	4	
	62FNH	**Nut**	4	
	62WFH	**Washer**—Flat Heavy	4	

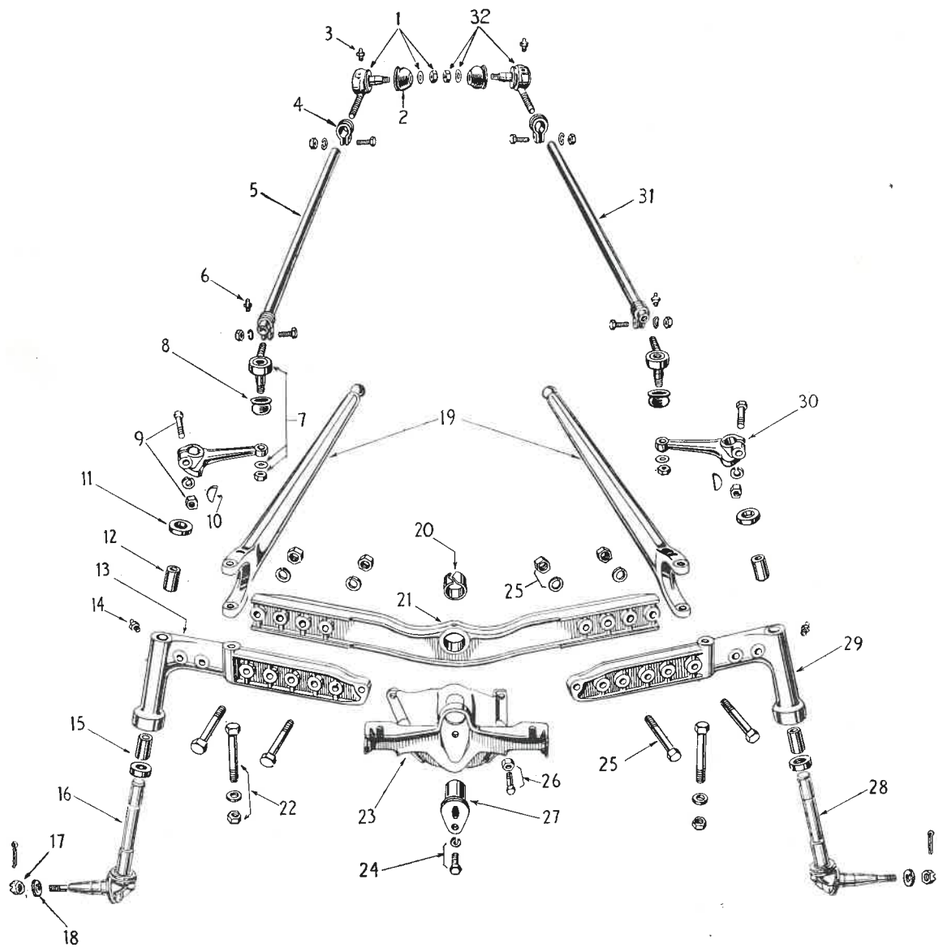

FIG. 31

Ref. No.	Part No.	Description	No. Off	Remarks
26	62FBH312	**Bolt**—Engine Support to Oil Pan TE.20	4	
	62FBH200	**Bolt**—Engine Support to Cylinder Block TE.A.20	4	
	62FNH	**Nut**	4	
	62WL	**Washer**—Lock	4	
	44FBH162	**Bolt**—Engine Support to Sump TE.A.20	1	2 off when required.
	44FBH212	**Bolt**—Engine Support to Sump TE.A.20	1	
	44FNH	**Nut**	2	
	44WL	**Washer**—Lock	2	
27	4089	**Pin**—Front Axle—TE.20	1	
	1569	**Pin**—Front Axle—TE.A.20	1	
28	8518	**Spindle**—Front Axle L.H.	1	1 to 49,998 & 52,497 to 53,566.
	8645	**Spindle**—Front Axle—L.H.	1	49,999 to 52,496 & 52,567 to 130,000.
29	8513	**Axle Assembly**—Front—L.H.	1	
		comprising :—		
	8515	**Axle**—Not Serviced Separately...	2	
	1128	**Bushing**	1	
30	4090	**Arm**—Spindle	1	
	44FBH262	**Bolt**—Spindle Arm	1	
	44FNH	**Nut**	1	
	44WL	**Washer**—Lock	1	
31	7051	**Link Assembly**—Steering Drag—L.H.	1	Complete with Sockets and Clamps.
		Alternatively :—		
	7191	**Link Assembly**—Steering Drag—L.H.	1	
32	1455	**Socket Assembly**—Rear L.H.	1	
		including :—		
	50FNHJ	**Nut**	1	
	25SLF	**Lubricator**	1	
	1886	**Boot**—Rubber	1	
	50WF	**Washer**—(Not included in assembly)	1	
		Alternatively :—		
	1980	**Socket Assembly**—Rear L.H. including	1	
	50FNHJ	**Nut**	1	
	25SLF	**Lubricator**	1	
	1923	**Boot**—Rubber	1	
	50WF	**Washer**—(Not included in assembly)	1	

FIG. 32

Ref. No.	Part No.	Description	No. Off	Remarks
		FIG. 32 FRONT HUB AND SPINDLE		
1	4090	**Arm**—Spindle	2	
2	44FBH262	**Bolt**—Arm to Spindle	2	
	44FNH	**Nut**—Spindle Arm Bolt	2	
	44WL	**Washer**—Lock	2	
3	1509	**Seal**—Steering Arm	2	
4	1476	**Key**—Woodruff	2	
5	8517	**Spindle**—Front Axle R.H.	1	1 to 49,998 & 52,497 to 52,566.
	8644	**Spindle**—Front Axle R.H.	1	49,999 to 52,496 & 52,567 to 130,000.
	8518	**Spindle**—Front Axle L.H.	1	1 to 49,998 & 52,497 to 52,566.
	8645	**Spindle**—Front Axle L.H.	1	49,999 to 52,496 & 52,567 to 130,000.
6	8512	**Axle Assembly**—Front—R.H.	1	
		comprising :—		
	8514	**Axle**—Not Serviced Separately		
	1128	**Bushing**—Spindle	2	
	8513	**Axle Assembly**—Front—L.H.	1	
		comprising :—		
	8515	**Axle**—Not Serviced Separately		
	1128	**Bushing**—Spindle	2	
7	12PLF	**Lubricator**	2	
8	1110	**Bearing**—Spindle	2	
9	2048	**Seal**—Oil	2	
10	4086	**Cone** and **Roller**—Inner—Not Serviced Separately—Order 4067 Bearing Assembly		
11	4098	**Cup**—Inner—Not Serviced Separately—Order 4067 Bearing Assembly		
12	7117	**Hub Assembly**—Front	2	Use with 8517 & 8518 Spindles.
		comprising :—		
	7049	**Hub**—Not Serviced Separately		
	1120	**Stud**—Front Wheel	12	
	1150	**Plug**—Pipe	2	
	7188	**Hub Assembly**—Front	2	Use with 8644 & 8645 Spindles.
		comprising :—		
	7186	**Hub**—Not Serviced Separately		
	1120	**Stud**—Front Wheel	12	
	1150	**Plug**—Pipe	2	
13	1976	**Nut**—Front Wheel Stud	12	
14	4087	**Cone** and **Roller**—Outer—Not Serviced Separately—Order 4070 Bearing Assembly		

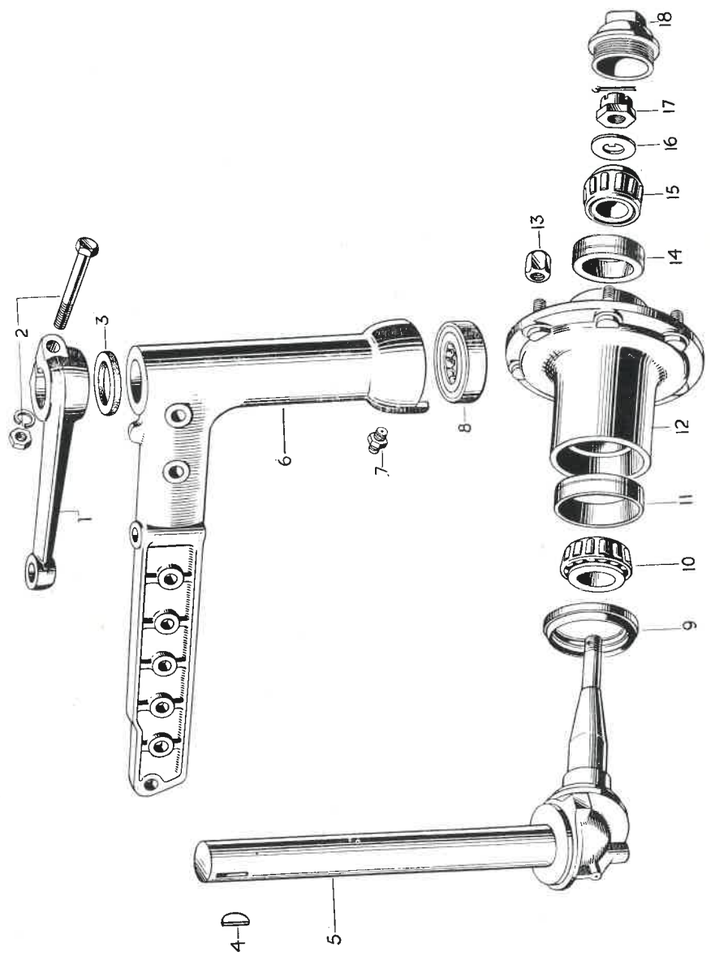

FIG. 32

Ref. No.	Part No.	Description	No. Off	Remarks
15	4088	**Cup**—Outer—Not Serviced Separately—Order 4070 Bearing Assembly		
16	1126	**Washer**—Bearing Retainer	2	
17	1165	**Nut**—Hex. Castle	2	
	16PC125	**Pin**—Cotter	2	
18	1121	**Cap**—Front Hub	2	
	1920	**Gasket**—Front Hub	2	
	4067	**Bearing Assembly**—Inner	2	Use with 8517 & 8518 Spindles & 7117 Hub.
	4070	**Bearing Assembly**—Outer	2	
	4300	**Bearing Assembly**—Inner	2	Use with 8644 & 8645 Spindles & 7188 Hub.
	4301	**Bearing Assembly**—Outer	2	

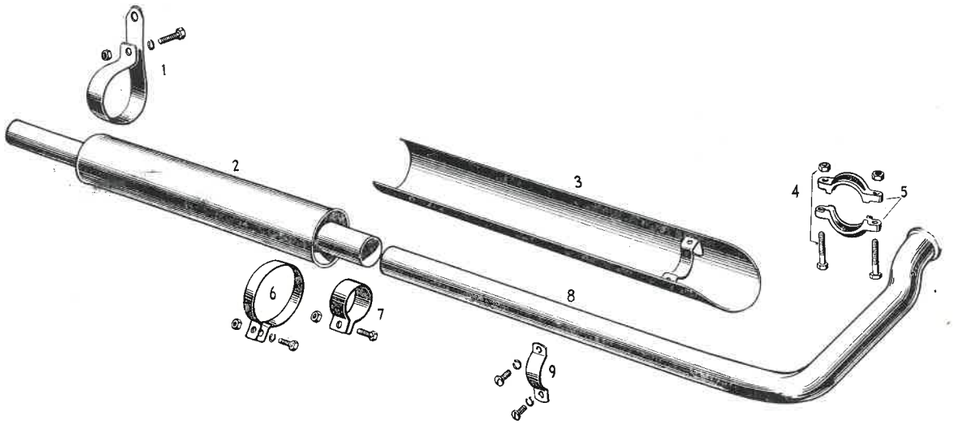

FIG. 33

Ref. No.	Part No.	Description	No. Off	Remarks
		FIG. 33 MUFFLER ASSEMBLY AND RELATED PARTS		
1	4111	**Clip**—Muffler to Axle Housing	1	
	31CBH100	**Bolt**—Muffler to Axle Housing Clip	1	
	31CNH	**Nut**—Muffler to Axle Housing Clip	1	
	31WL	**Washer**—Lock—Axle Housing Clip	1	
2	8539	**Muffler** and **Outlet Pipe**	1	
3	8561	**Shield Assembly**—Exhaust	1	
4	31CBH162	**Bolt**—Inlet Pipe Clamp	2	Used on TE.20 Tractor only.
	31CNH	**Nut**—Inlet Pipe Clamp	2	
5	1274	**Clamp**—Inlet Pipe	2	
6	1383	**Clip**—Exhaust Shield to Muffler	1	
	25CBH100	**Bolt**—Exhaust Shield to Muffler Clip	1	
	25CNH	**Nut**—Exhaust Shield to Muffler Clip	1	
	25WL	**Washer**—Lock—Exhaust Shield to Muffler Clip	1	
7	1277	**Clip**—Muffler Inlet Pipe	1	
	25CBH100	**Bolt**—Inlet Pipe Clip	1	
	25CNH	**Nut**	1	
	25WL	**Washer**—Lock	1	
8	8540	**Pipe**—Muffler Inlet—TE.20	1	
	8584	**Pipe**—Muffler Inlet—TE.A.20	1	
9	1276	**Half Clip**—Lower Exhaust Shield	1	
	25CSR62	**Screw**—Lower Exhaust Shield	2	
	25WL	**Washer**—Lock	2	

Ref. No.	Part No.	Description	No. Off	Remarks
		Not Illustrated.		
	1574	**Gasket**—Exhaust Flange—TE.A.20	1	
	56675	**Nut**—$\frac{3}{8}''$ × 16N.C.	2	
	38WL	**Washer**—Lock	2	
	1954	**Bracket**—Exhaust Pipe Clip—TE.A.20	1	
	1955	**Clip**—Exhaust Pipe—TE.A.20	1	
	31CBH238	**Bolt**—Hex.—TE.A.20	1	
	31CNH	**Nut**—TE.A.20	1	
	31WF	**Washer**—Flat—TE.A.20	1	

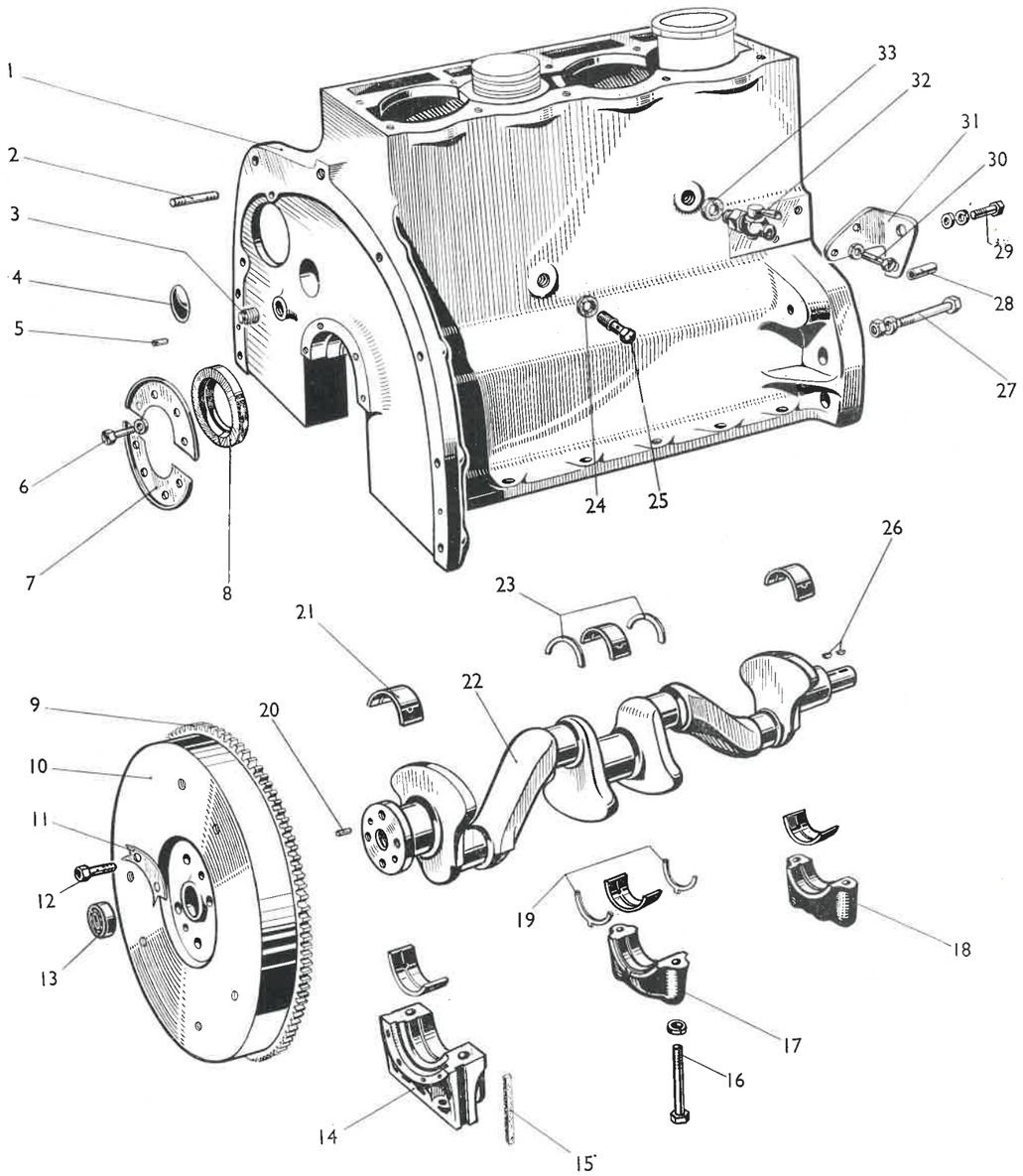

FIG. 34.

Ref. No.	Part No.	Description	No. Off	Remarks
		FIG. 34. CYLINDER BLOCK with CRANKSHAFT, FLYWHEEL and RELATED PARTS. TE.A.20		
	57963	**Engine Unit Assembly**	1	
	59833	**Engine Assembly**—less Electrics, Carburettor, Water Pump, Manifold, Oil Filter and Water Outlet Elbow	1	Service Assembly.
1	57964	**Cylinder Block Assembly**—includes items 3, 4, 14, 15, 16, 17, 18, 32 & 33—items 9 & 37 fig. 37— & item 42 fig. 35 ...	1	
2	59876	**Stud**—7/16″ N.C.—N.F. × 2″	1	
3	56765	**Plug**—Core ¾″ × 16 N.F. Thd.	2	
4	44473	**Plug**—Core—Rear End Camshaft	1	
5	59893	**Dowel**—⅜″ dia. × ¾″.	2	
6	25 CBH 50	**Screw**—Set ¼″ N.C. × ½″.	8	
	25 WL	**Spring Washer**	8	
7	56521	**Retainer**—Oil Seal	2	
8	57919	**Seal**—Rear Oil	1	
9	56287	**Gear**—Flywheel Ring	1	
10	60219	**Flywheel Assembly**—includes item 9	1	
11	56524	**Plate**—Locating—Flywheel Attachment	2	
12	56526	**Screw**—Set ⅜″ N.F. × 1.1/32″	4	
13	1112	**Bearing**—Clutch Pilot	1	
14	55677S	**Cap**—Rear Bearing—Not Serviced Separately		
15	58335	**Felt**—Rear Bearing Cap	2	
16	57121	**Screw**—Set ½″ N.C. × 3.13/32″	6	
	50 WL	**Spring Washer**	6	
17	55675S	**Cap**—Centre Bearing—Not Serviced Separately		
18	55676S	**Cap**—Front Bearing—Not Serviced Separately		
19	45919	**Washer**—Bottom Thrust	2	
20	59895	**Dowel** ⅜″ dia. × ½″	1	
21	56342	**Bearing**—Main—Standard Size	6	
	56342/2	**Bearing**—Main—.020″ undersize	as req.	
	56342/3	**Bearing**—Main—.030″ undersize	as req.	
	56342/4	**Bearing**—Main—.040″ undersize	as req.	

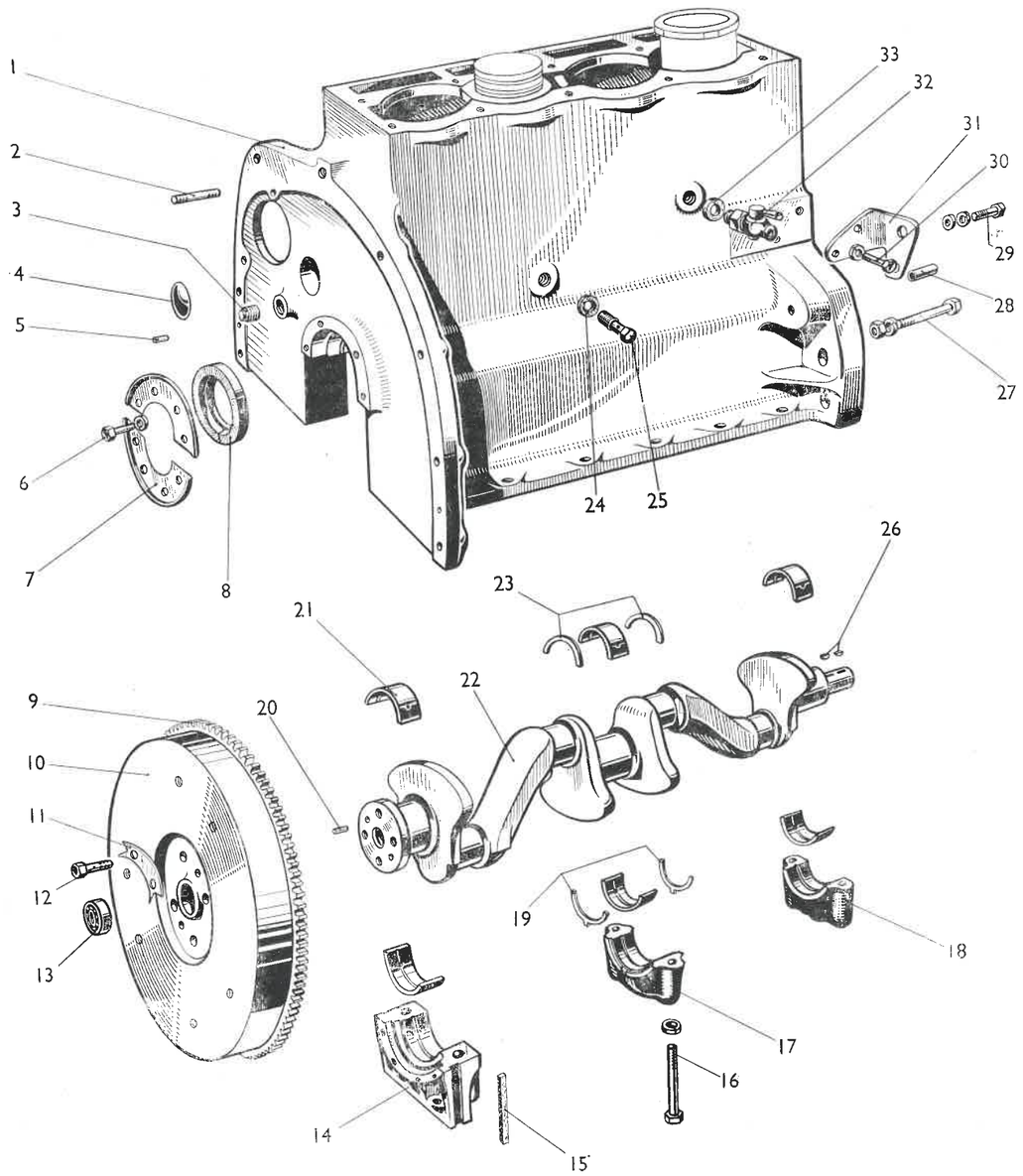

FIG. 34.

Ref. No.	Part No.	Description	No. Off	Remarks
22	58142	**Crankshaft**	1	
	55544	**Crankshaft**—required for Engines S1E to S100E only ...	1	
23	45918	**Washer**—Top Thrust	2	
24	59881	**Washer**—Fibre—$\frac{5}{8}$″ I/dia. × $\frac{7}{8}$″ O/dia. × 1/16″ thk. ...	1	
	59882	**Washer**—Fibre—9/16″ I/dia. × 13/16″ O/dia. × 1/16″ thk.	1	
25	57658	**Screw**—Union 9/16″ × 18 N.C.	1	
26	1273	**Key**—Woodruff—Chain Wheel and Pulley	2	
27	44 FBH 456	**Bolt**—Hex. 7/16″ N.F. × 4.9/16″	1	
	44 FNH	**Nut**—Hex. 7/16″ N.F. Thd.	1	
	44 WL	**Spring Washer**	1	
28	56418	**Distance Piece**—Dynamo Bracket	1	
29	44 FBH 144	**Bolt**—Hex. 7/16″ × 20 N.F. × 1.7/16″	1	
	44 WL	**Spring Washer**	1	
	44 WF	**Washer**	1	
30	31 CBH 75	**Screw**—Set 5/16″ × 18 N.C. × 3/4″	2	
	31 WL	**Spring Washer**	2	
31	56417	**Bracket Assembly**—Dynamo	1	
32	58133	**Tap**—Drain 1/2″ × 20 N.F. Thd.	1	
33	59878	**Washer**—Fibre—Drain Tap	1	

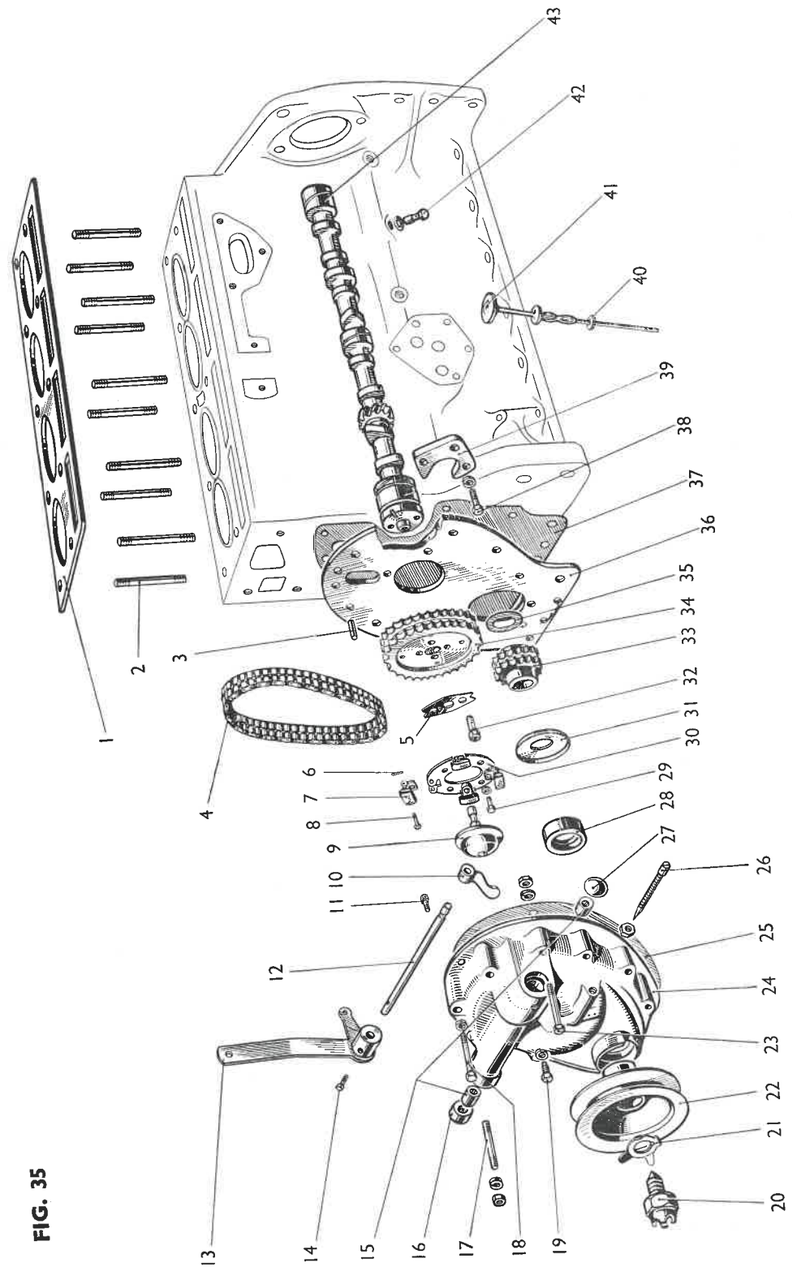

FIG. 35

Ref. No.	Part No.	Description	No. Off	Remarks
		FIG. 35. CAMSHAFT, TIMING COVER and GOVERNOR DETAILS. TE.A.20		
1	56823	**Gasket**—Cylinder Head	1	
2	55942	**Stud**—7/16"—N.C.—N.F. × 4.27/32"...	10	
3	59894	**Dowel** 3/8" Dia. × 3/4"	2	
4	57151	**Chain**—Duplex	1	
5	56293	**Plate**—Lock—Chain Wheel to Camshaft	1	
6	06 PC 50	**Pin**—Split	4	
7	56313	**Weight Assembly**—Governor	4	
8	56315 59888	**Pin**—Fulcrum—Governor Weight ... ... **Washer**—Fulcrum Pin	4 4	
9	56319	**Cup and Shaft Assembly**	1	
10	56724	**Arm**—Governor Rocker	1	
11	57130	**Screw**—Taper Set. See item 14	1	
12	56307	**Shaft**—Governor	1	
13	57088	**Lever Assembly**—Governor	1	
14	57130	**Screw**—Taper Set. See item 11	1	
15	56306	**Bearing**—Needle Roller—Governor Shaft	2	
16	56296	**Seal**—Dust and Oil—Governor Shaft	1	
17	59875 31 FNH 31 WL	**Stud**—5/16" N.C.—N.F. × 2.11/16" ... ... **Nut**—Hex 5/16"—N.F. Thd. ... ... **Spring Washer**	1 1 1	
18	31 CBH 238 31 WL	**Bolt**—Hex. 5/16"—N.C. × 2.3/8" ... ... **Spring Washer**	8 8	
19	57894 25 WL	**Screw**—Locating 1/4"—20 N.C. Thd. ... ... **Spring Washer**	1 1	
20	56393 27670	**Jaw**—Starter ... ... **Shim**—Starter Jaw	1 as req.	
21	56575	**Washer**—Tab—Starter Jaw	1	
22	56330	**Pulley**—Crankshaft	1	
23	31 FBH 212 31 FNH 31 WL	**Bolt**—Hex 5/16"—N.F. × 2.1/8" ... ... **Nut**—Hex. 5/16"—N.F. Thd. ... ... **Spring Washer**	3 3 3	

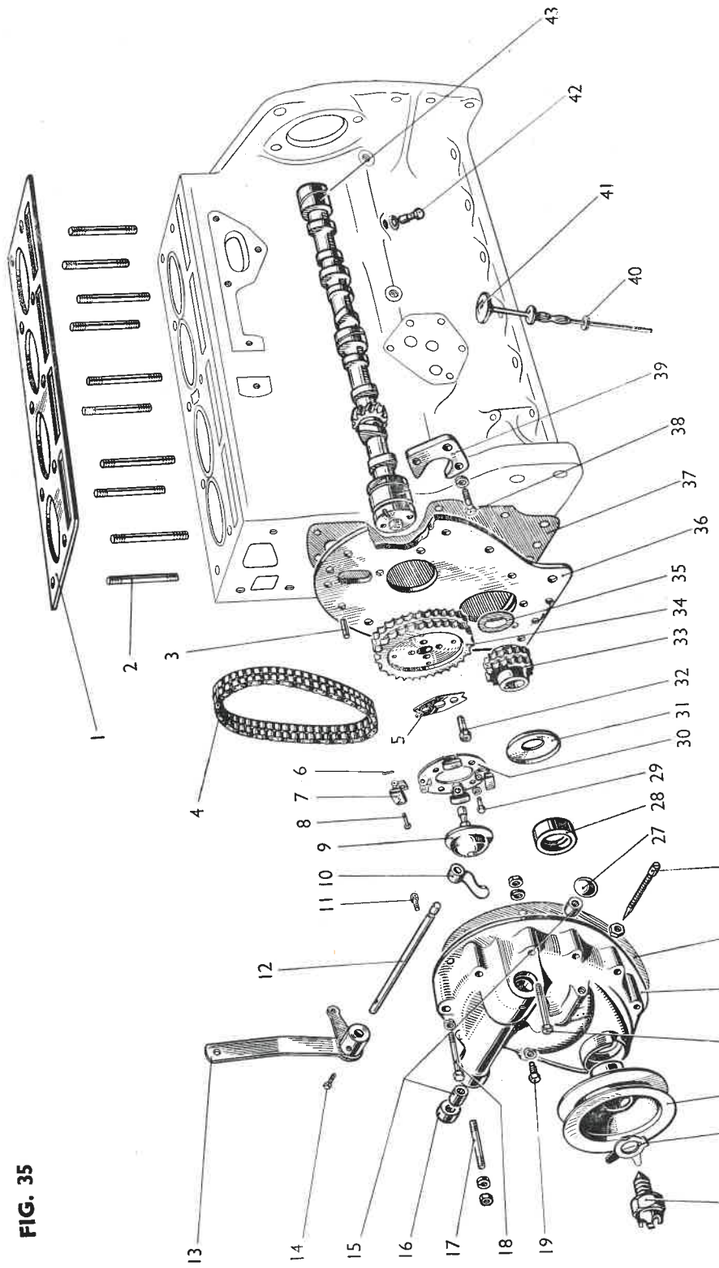

FIG. 35

Ref. No.	Part No.	Description	No. Off	Remarks
24	56289	**Cover**—Timing	1	
25	56290	**Joint**—Timing Cover	1	
26	56294	**Screw**—Governor Bumper Adjusting	1	
	25 CNH	**Locknut**—Governor Bumper Screw	1	
	56295	**Spring**—Governor Bumper. Not illustrated	1	
	12 RB 38	**Rivet**—Governor Bumper Spring	2	
27	46172	**Plug**—Core—Timing Cover	1	
28	56391	**Seal**—Oil—Crankshaft front	1	
29	25 FBH 38	**Screw**—Set 1/4″—28 N.F. × 3/8″—Plate to Chain Wheel ...	4	
	25 WL	**Spring Washer**	4	
30	56311	**Plate**—Governor Weight Anchor	1	
31	57196	**Deflector**—Oil—Crankshaft	1	
32	56370	**Screw**—Set—5/16″—18 N.C. × 15/16″—Wheel to Camshaft	2	
33	55971	**Wheel**—Crankshaft Chain	1	
34	55970	**Wheel**—Camshaft Chain	1	
35	56522	**Shim .004″**—Crankshaft—Front End	as req.	
	56523	**Shim .006″**—Crankshaft—Front End	as req.	
36	56388	**Plate**—Front Engine	1	
	31 CBH 75	**Bolt**—Plate Attachment. Not illustrated	4	
	31 WL	**Spring Washer**—Not illustrated	4	
37	56389	**Washer**—Front Engine Plate	1	
38	56384	**Screw**—Set—5/16″—18 N.C. × 31/32″—Camshaft Locating Plate	3	
	31 WL	**Spring Washer**	3	
39	56392	**Plate**—Camshaft Locating	1	
40	32307	**Washer**—Felt—Dipstick	1	
41	56583	**Dipstick Assembly**	1	
42	56664	**Screw**—Union 3/8″ × 16 N.C.	1	
	59879	**Washer**—Fibre	2	
43	56216	**Camshaft**	1	

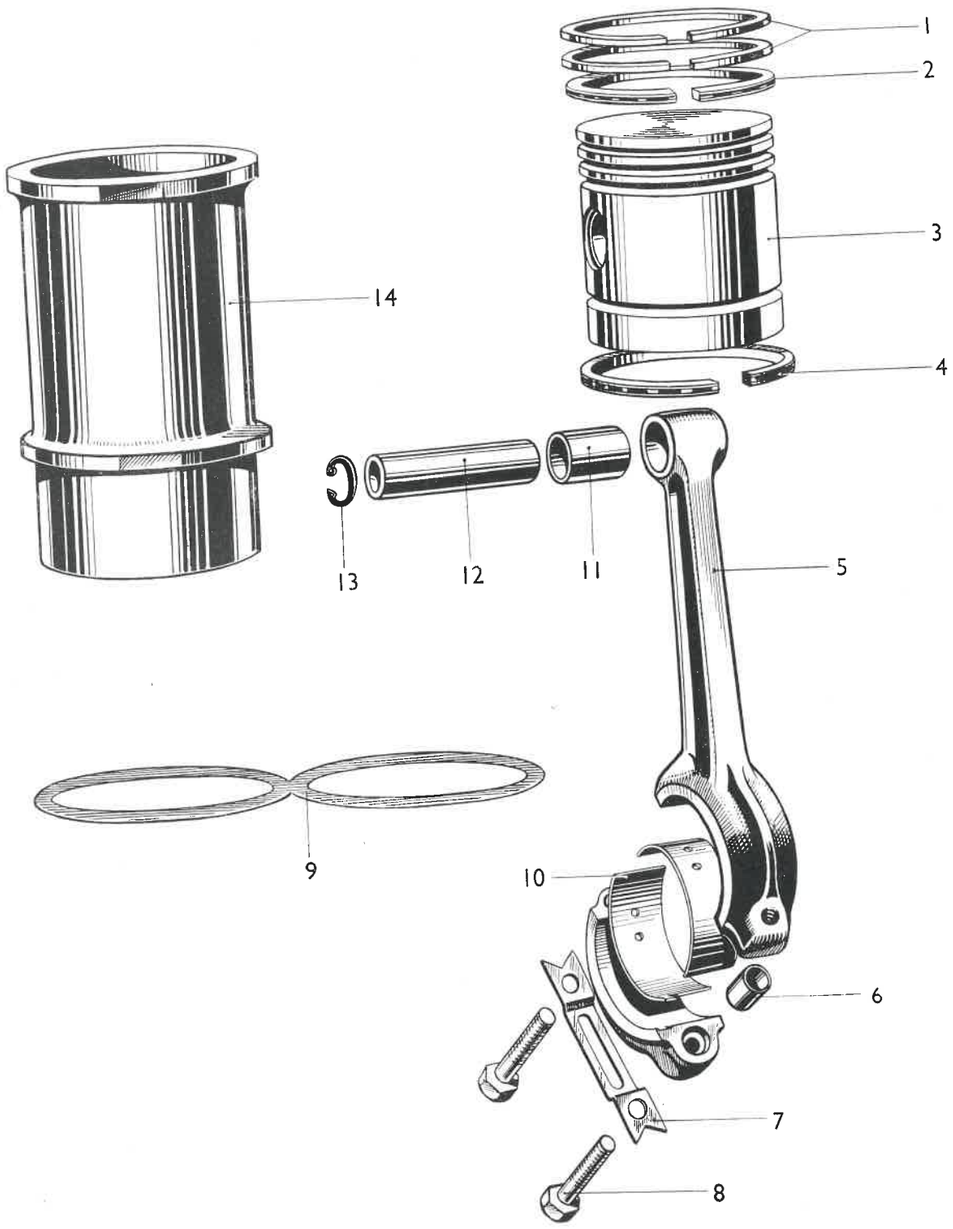

FIG. 36

Ref. No.	Part No.	Description	No. Off	Remarks
		FIG. 36. PISTON, CONNECTING ROD, SLEEVE AND RELATED PARTS. TE.A.20		
	58141	**Piston Assembly**—Comprising items—1, 2, 3, 4, 12 and 13.	4	
	58141/2	**Piston Assembly**—.020″ oversize	4	
	58141/3	**Piston Assembly**—.030″ oversize	4	
	58141/4	**Piston Assembly**—.040″ oversize	4	
	57736	**Piston Assembly**—90 m/m Stroke Engines	4	
1	60128	**Ring**—Compression 3/32″ Wide	8	
	60128/1	**Ring**—Compression 3/32″ Wide—.010″ oversize	8	
	60128/2	**Ring**—Compression 3/32″ Wide—.020″ oversize	8	
	60128/3	**Ring**—Compression 3/32″ Wide—.030″ oversize	8	
	60128/4	**Ring**—Compression 3/32″ Wide.—.040″ oversize	8	
2	60129	**Ring**—Scraper 3/16″ Wide.	4	
	60129/1	**Ring**—Scraper 3/16″ Wide—.010″ oversize	4	
	60129/2	**Ring**—Scraper 3/16″ Wide—.020″ oversize	4	
	60129/3	**Ring**—Scraper 3/16″ Wide—.030″ oversize	4	
	60129/4	**Ring**—Scraper 3/16″ Wide—.040″ oversize	4	
3	60134	**Piston**—Not Serviced Separately. Order 58141		
	60127	**Piston**—Not Serviced Separately. Order 57736		
4	60133	**Ring**—Scraper 5/32″ Wide—Slotted	4	Use for replacements.
	60133/1	**Ring**—Scraper 5/32″ Wide—.010″ oversize	4	
	60133/2	**Ring**—Scraper 5/32″ Wide—.020″ oversize	4	
	60133/3	**Ring**—Scraper 5/32″ Wide—.030″ oversize	4	
	60133/4	**Ring**—Scraper 5/32″ Wide—.040″ oversize	4	
	58393	**Rod**—Connecting Assembly. Comprising items 5, 6, 7, 8 and 11	4	Use for all replacements.
5	60094	**Rod**—Connecting—Not Serviced Separately. Order 58393 ...		
	55951	**Rod**—Connecting—Not Serviced Separately. Order 58393 ...		
6	60070	**Bush**—Connecting Rod Bolt	8	
7	56211	**Tab Washer**—Connecting Rod Bolt	4	
8	60079	**Bolt**—Connecting Rod	8	used for 60094 Conn. Rod.
	56212	**Bolt**—Connecting Rod	8	used for 55951 Conn. Rod
9	56285	**Gasket**—Cylinder Liner	2	
10	60841	**Bearing**—Connecting Rod	4 pr.	
	60841/2	**Bearing**—Connecting Rod—.020″ undersize	4 pr.	
	60841/3	**Bearing**—Connecting Rod—.030″ undersize	4 pr.	
	60841/4	**Bearing**—Connecting Rod—.040″ undersize	4 pr.	
11	56251	**Bush**—Connecting Rod	4	
12	60130	**Pin**—Gudgeon	4	
13	45985	**Circlip**—Gudgeon Pin Retaining	8	
14	56203	**Liner**—Cylinder	4	

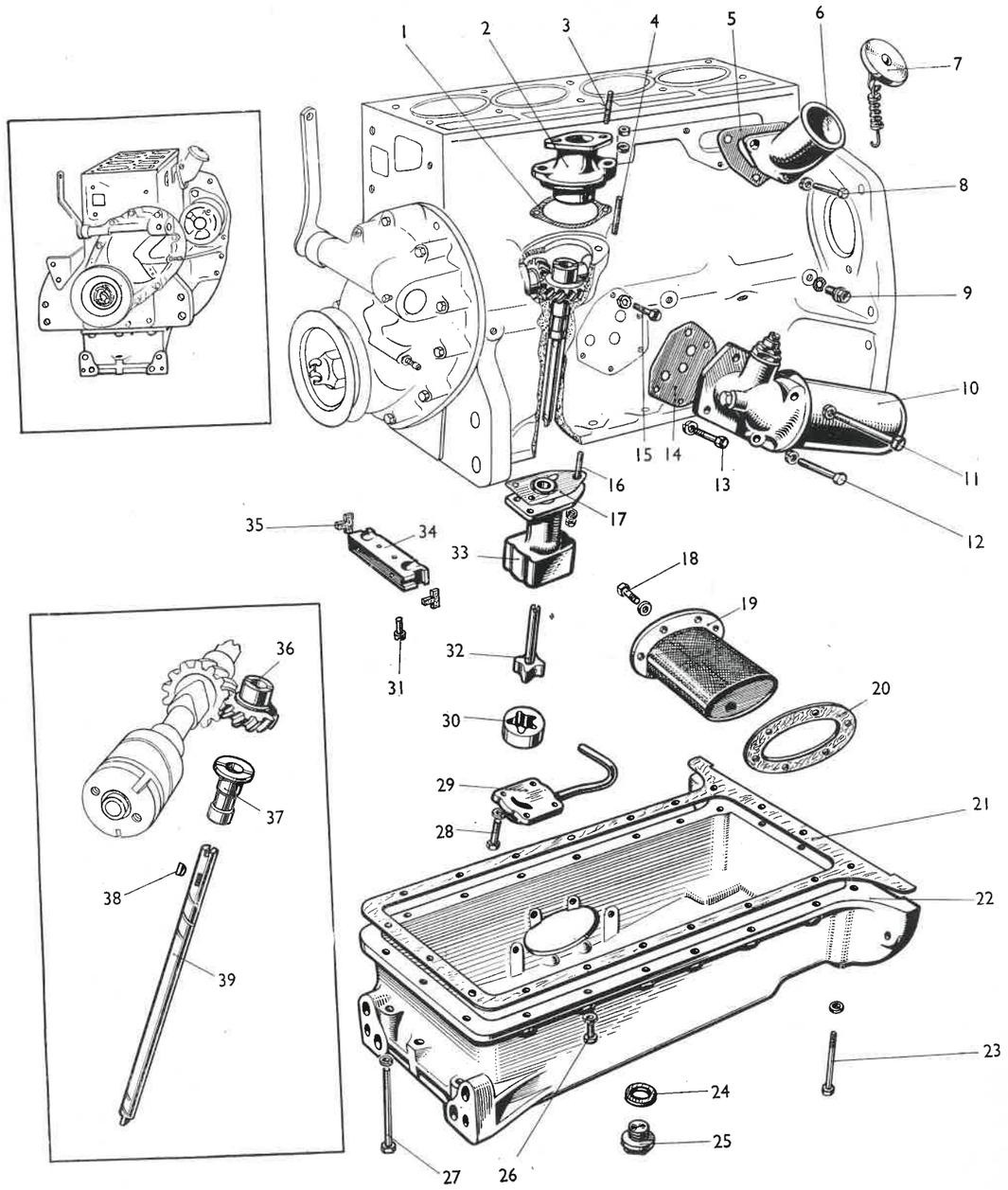

FIG. 37

Ref. No.	Part No.	Description	No. Off	Remarks
		FIG. 37. OIL SUMP, OIL PUMP AND DISTRIBUTOR SHAFT DETAILS. TE.A.20		
1	56407	**Washer**—Distributor Adaptor	1	
2	56406	**Adaptor**—Distributor	1	
3	59870	**Stud**—1/4"—N.F. and N.C. × 13/16"	2	
	25 FNH	**Nut** 1/4" × 28 N.F.	2	
	25 WL	**Spring Washer**	2	
4	59872	**Stud** 5/16"—N.F. and N.C. × 1.5/16"	2	
	31 FNH	**Nut** 5/16" × 24 N.F. Thd.	2	
	31 WL	**Spring Washer**	2	
5	57203	**Washer**—Filler Body to Cylinder Block	1	
6	58122	**Body**—Oil Filler	1	
7	58123	**Cap Assembly**—Oil Filler	1	
8	31 CBH 75	**Bolt** 5/16" — 18 N.C. × 3/4" — Filler Body to Cyl. Block	3	
9	44 CBH 50	**Screw**—Set 7/16"—14 N.C. × 1/2" — Oil Gallery	3	
	59880	**Washer**—Fibre	3	
10	59383	**Oil Filter**—Inclined—See Fig. 40	1	
	57765	**Oil Filter**—Vertical—See Fig. 41	1	
11	31 CBH 400	**Bolt** 5/16" × 18 N.C. × 4"—Filter Attachment	1	used for 59383
	31 WL	**Spring Washer**	1	used for 59383
	31 CBH 438	**Bolt** 5/16" × 18 N.C. × 4.3/8"—Filter Attachment ...	2	used for 57765
	31 WL	**Spring Washer**	2	used for 57765
12	31 CBH 294	**Bolt** 5/16" × 18 N.C. × 2.15/16"—Filter Attachment ...	1	used for 59383
	31 WL	**Spring Washer**	1	used for 59383
	31 CBH 312	**Bolt** 5/16" × 18 N.C. × 3.1/8"—Filter Attachment ...	1	used for 57765
	31 WL	**Spring Washer**	1	used for 57765
13	31 CBH 106	**Bolt** 5/16" × 18 N.C. × 1.1/16"—Filter Attachment ...	1	used for 59383
	31 WL	**Spring Washer**	1	used fo 59383
14	56420	**Washer**—Oil Filter to Cylinder Block	1	used for 59383
	57767	**Washer**—Oil Filter to Cylinder Block	1	used for 57765
15	31 CBH 106	**Bolt** 5/16" × 18 N.C. × 1.1/16—Filter Attachment... ...	1	used for 59383
	31 WL	**Spring Washer**	1	used for 59383
	59874	**Stud** 5/16" N.F. and N.C. × 1.11/16"—Filter Attachment ...	1	used for 57765
	31 FNH	**Nut** 5/16" × 24 N.F. Thd.	1	used for 57765
	31 WL	**Spring Washer**	1	used for 57765
16	59871	**Stud** 5/16" N.F. and N.C. × 1.1/4"—Oil Pump Attachment	3	
	31 FNH	**Nut** 5/16" × 24 N.F. Thd.	3	
	31 WL	**Spring Washer**	3	

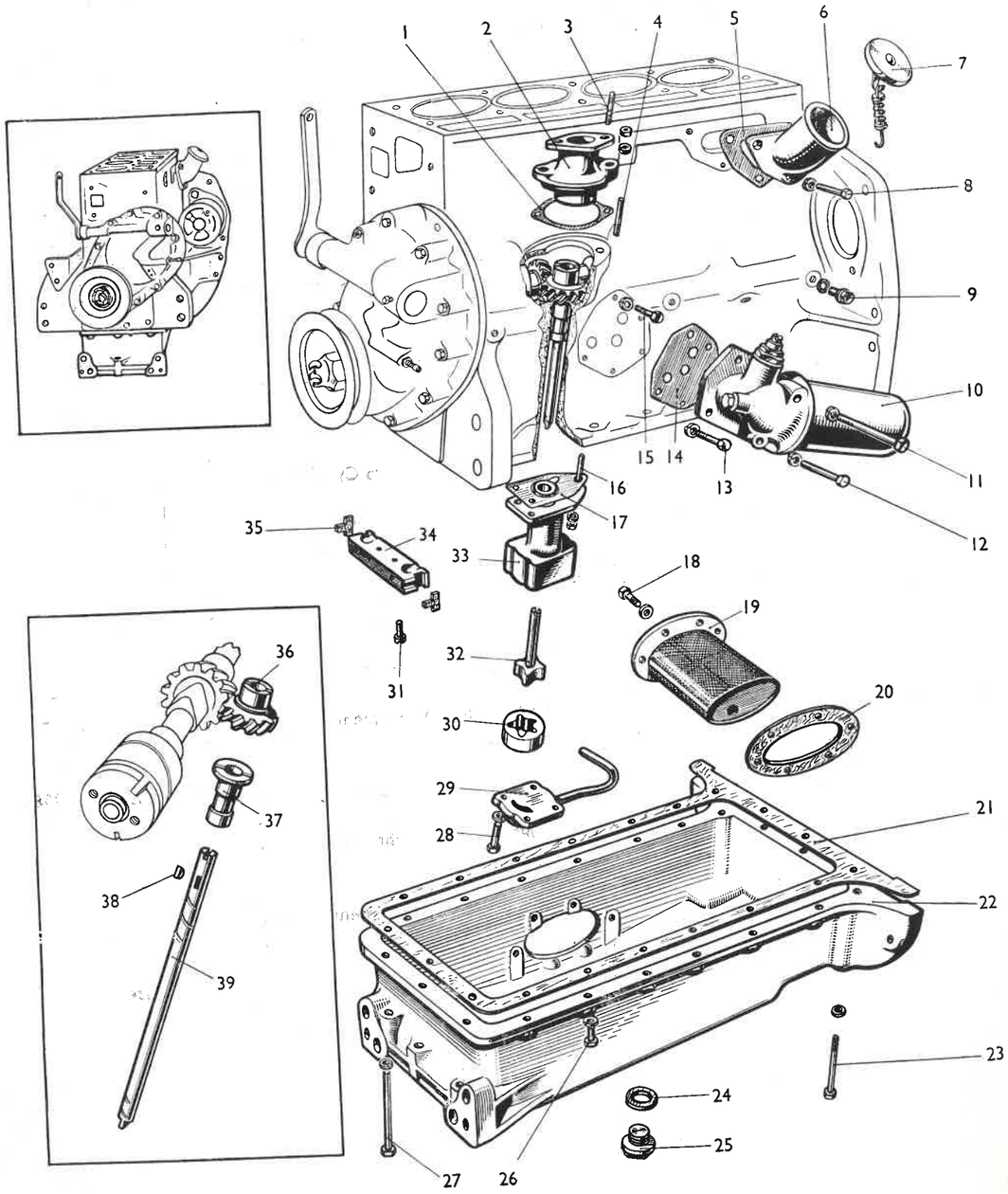

FIG. 37

Ref. No.	Part No.	Description	No. Off	Remarks
17	56282	**Washer**—Oil Pump to Cylinder Block	1	
18	31 CBH 56 31 WF	**Screw**—Set 5/16″ × 18 N.C. × 9/16″ — Filter to Oil Sump **Washer**—Plain	6 6	
		Alternatively :—		
	61049 31 WF 31 FNH	**Stud** 5/16″ N.C. and N.F. × 7/8″—Filter to Oil Sump ... **Washer**—Plain ... ... **Nut** 5/16″ × 24 N.F. Thd.	6 6 6	
19	56351	**Oil Filter**—Suction—Assembly	1	
20	56350	**Joint**—Oil Filter Cover	1	
21	56386	**Washer**—Oil Sump	1	
22	59323	**Oil Sump**	1	
23	31 CBH 512 31 WL	**Bolt** 5/16″ × 18 N.C. × 5.1/8″—Rear of Sump ... ... **Spring Washer**	4 4	
24	59883	**Washer**—Fibre—Drain Plug	1	
25	58294	**Plug**—Drain—1″ × 14 N.F. Thd.	1	
26	31 CBH 125 31 WL	**Bolt** 5/16″ × 18 N.C. × 1.1/4″—Sides o Sump ... ... **Spring Washer**	12 12	
27	31 CBH 544 31 WL	**Bolt** 5/16″ × 18 N.C. × 5.7/16″—Front of Sump ... ... **Spring Washer**	3 3	
	57313	**Oil Pump Assembly**—Comprising items 28, 29, 30, 32 & 33	1	
28	25 CBH 75 25 WL	**Bolt** 1/4″ × 20 N.C. × 3/4″—Cover to Oil Pump ... ... **Spring Washer**	4 4	
29	57320	**Cover Assembly**—Oil Pump	1	
30	57317	**Rotor**—Outer	1	
31	56574	**Screw**—Ch. Hd. 5/16″ × 18 N.C. × 29/32″—Sealing Block Attachment	2	
32	57314	**Spindle Assembly**—Oil Pump...	1	
33	57319	**Body**—Oil Pump	1	
34	55810	**Sealing Block**—Front	1	
35	59381	**Sealing Pad**—Sealing Block	2	

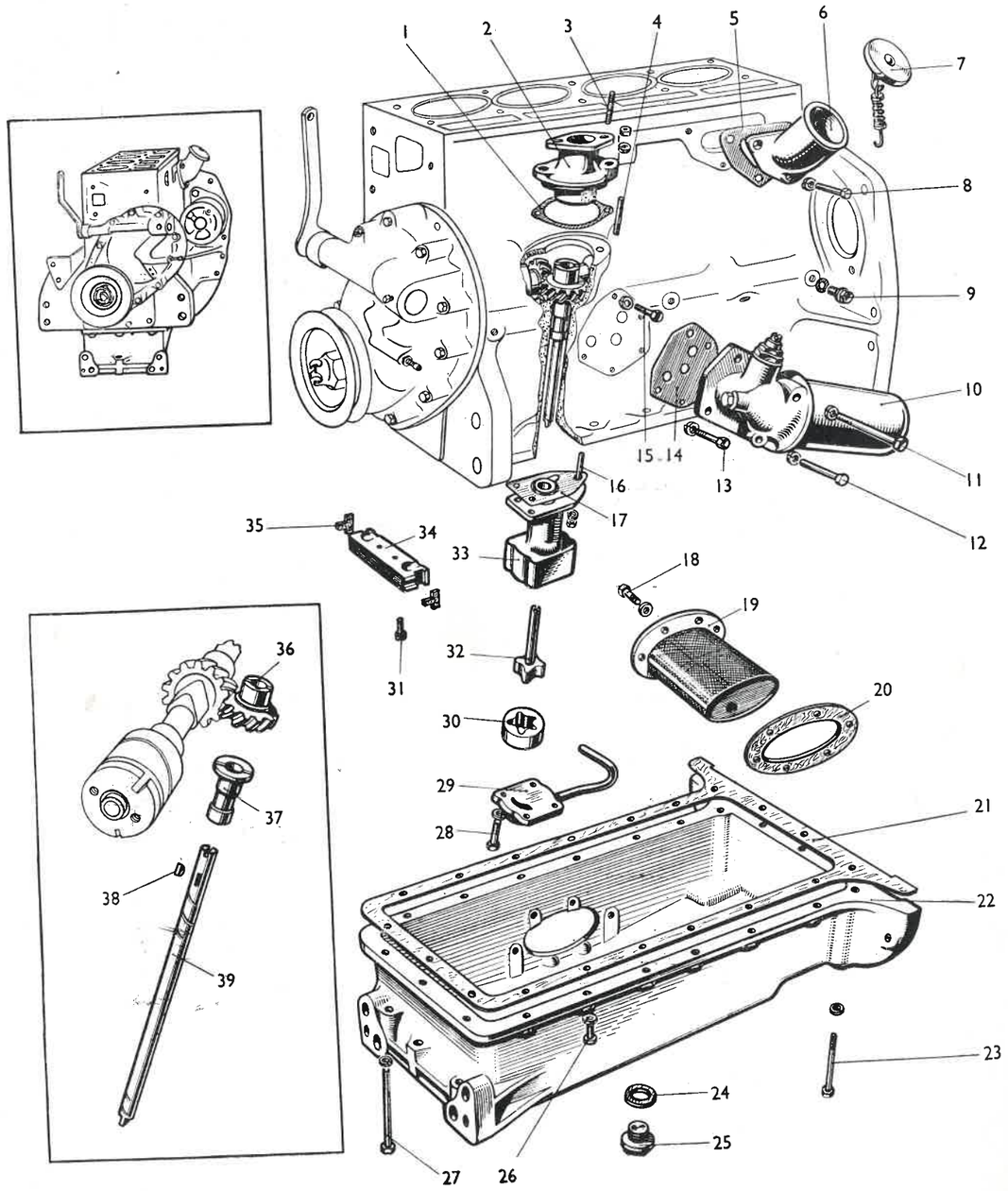

FIG. 37

Ref. No.	Part No.	Description	No. Off	Remarks
36	56403	**Gear**—Driving	1	Eng. No. S1E to S2684E.
	59389	**Gear Assembly**—Driving ... ... 59389 Gear Assembly can be used to replace 56403 Gear, providing it is used with 59387 Drive Shaft	1	Eng. No. S2685E and future.
37	56405	**Bush**—Oil Pump Shaft	1	
38	59889	**Key**—Woodruff No. 2.	1	
39	56404	**Drive Shaft**—Oil Pump	1	Eng. No. S1E to S2684E see note above
	59387	**Drive Shaft**—Oil Pump	1	Eng. No. S2685E and future.

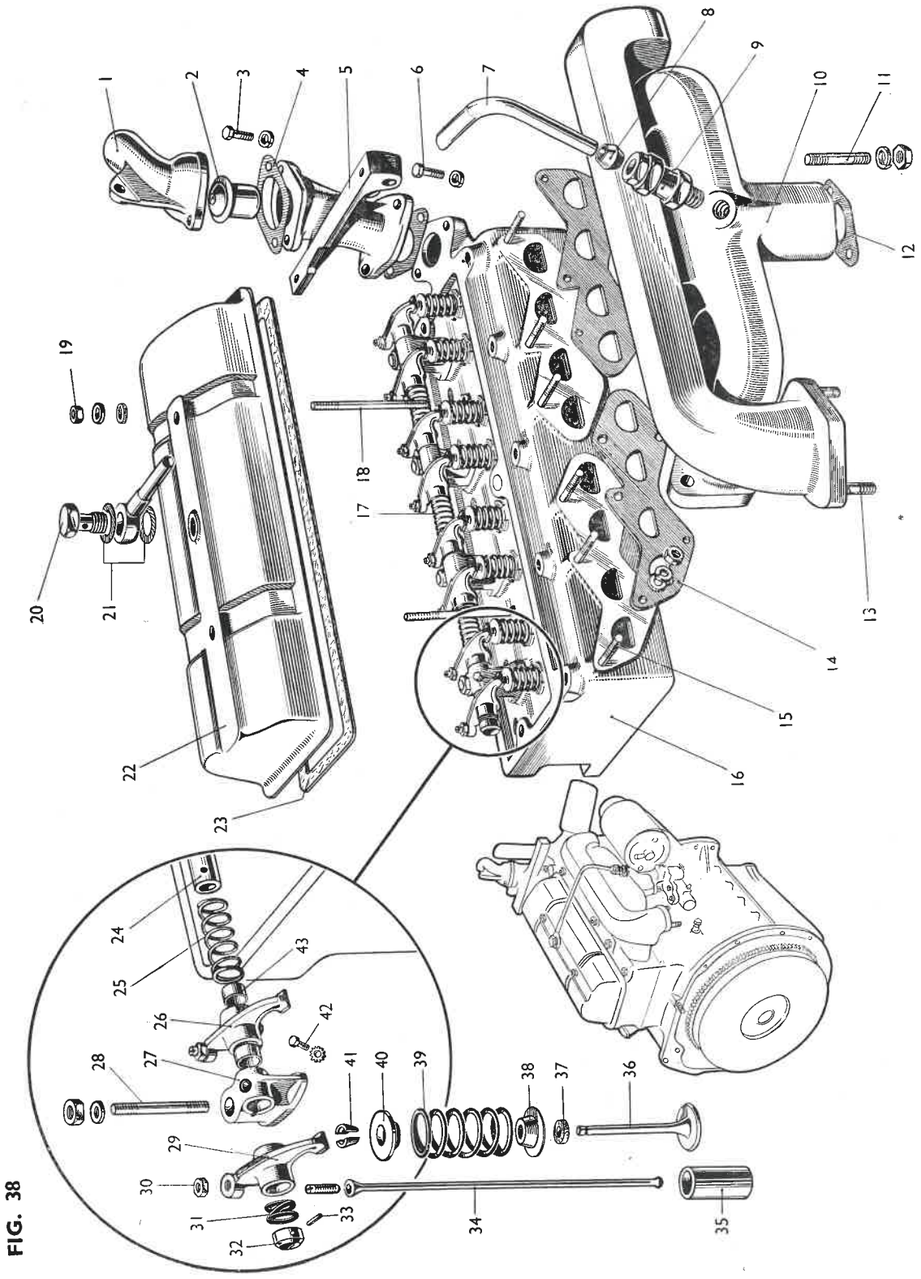

FIG. 38

Ref. No.	Part No.	Description	No. Off	Remarks
		FIG. 38. CYLINDER HEAD and RELATED PARTS TE.A.20		
1	57042	**Elbow**—Water Outlet	1	
2	57102	**Thermostat Unit**	1	
3	31 CBH 88 31 WL	**Bolt**—$\frac{5}{16}''$ × 18 N.C. × $\frac{7}{8}''$—Elbow to Body ... ... **Spring Washer**	2 2	
4	57103	**Gasket**—Elbow to Thermostat Body and Body to Cylinder Head	2	
5	57030 57073 59896	**Body**—Thermostat ... ... **Connection**—Bypass water—not illustrated ... ... **Clip**—Pipe—not illustrated	1 1 2	
6	31 CBH 88 31 WL	**Bolt** $\frac{5}{16}''$ × 18 N.C. × $\frac{7}{8}''$—Body to Cylinder Head... ... **Spring Washer**	2 2	
7	58189	**Tube Assembly**—Connecting—Vent Valve to Rocker Cover	1	
8	59890	**Sleeve**—Tube to Vent Valve	1	
9	57889 37417	**Valve Assembly**—Crankcase Vent ... ... **Washer**	1 1	
10	57341	**Manifold**—Inlet and Exhaust	1	
11	59873 31 FNH 31 WL	**Stud**—$\frac{5}{16}''$ N.F. and N.C. × $1\frac{3}{8}''$—Carburettor Attachment ... **Nut**—$\frac{5}{16}''$ × 24 N.F. ... ... **Spring Washer**	2 2 2	
12	58297	**Washer**—Carburettor to Manifold	1	
13	56561	**Stud**—$\frac{3}{8}''$ × 16 N.C. × $1\frac{1}{2}''$—Exhaust Pipe Attachment ...	2	
14	57071	**Washer**—Manifold to Cylinder Head	2	
15	56561 56675 38 WL 38 WF	**Stud**—$\frac{3}{8}''$ × 16 N.C. × $1\frac{1}{2}''$—Manifold Attachment ... ... **Nut** $\frac{3}{8}''$ × 16 N.C. ... ... **Spring Washer** ... ... **Washer**—Flat	10 10 10 10	Not included in 59834 Cylinder Head Assembly
	59834	**Head**—Cylinder Assembly ... ... **Comprising :**—Items 15 through 19, 22 through 33, 36 through 42	1	Service Assembly.
16	57967	**Head**—Cylinder Assembly ... ... **Comprising :**—Cylinder Head with Valve Guides, Tubes for Push Rods and Core Plugs only.	1	
17	56434	**Spring**—Rocker—Centre	1	
18	55945	**Stud** $\frac{5}{16}''$ N.F. and N.C. × $3\frac{1}{2}''$—Rocker Cover	2	

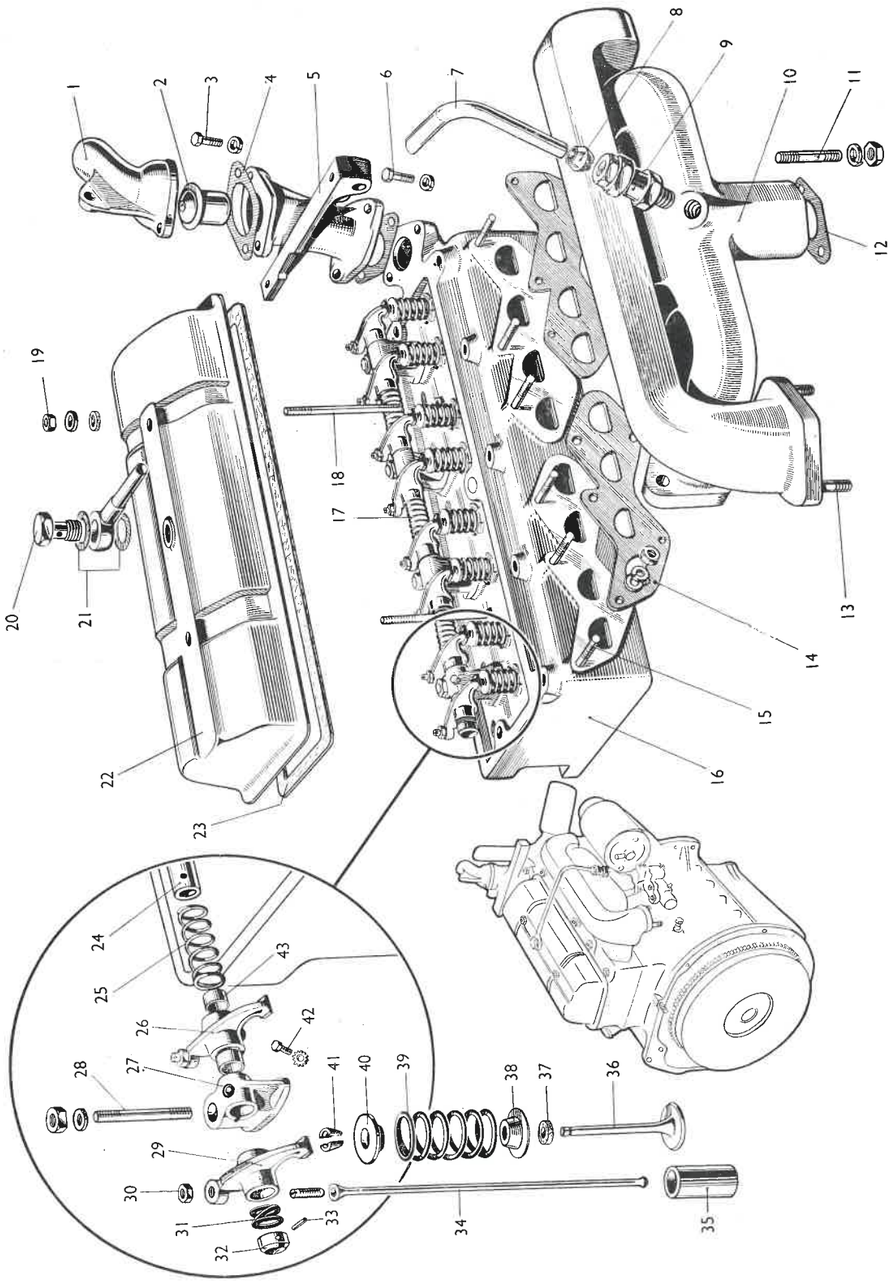

FIG. 38

Ref. No.	Part No.	Description	No. Off	Remarks
19	31 FNH	**Nut** $\frac{5}{16}''$ × 24 N.F.	2	
	31 WF	**Washer**—Flat	2	
	59884	**Washer**—Fibre	2	
20	58182	**Screw**—Union—Tube to Rocker Cover	1	
21	59885	**Washer**—Fibre	2	
22	55950	**Cover Assembly**—Rocker	1	
23	55943	**Washer**—Rocker Cover	1	
24	58081	**Shaft**—Rocker	1	
25	55873	**Spring**—Rocker—Intermediate	2	
26	59000	**Rocker Assembly No. 1**—Includes Bush	4	
27	55822	**Pedestal**—Rocker—Drilled—Illustrated	1	
	55823	**Pedestal**—Rocker—Plain	3	
28	55941	**Stud** $\frac{3}{8}''$ N.F. and N.C. × $3\frac{1}{16}''$—Rocker Pedestal	4	
	38 FNH	**Nut** $\frac{3}{8}''$ × 24 N.F.	4	
	38 WL	**Spring Washer**	4	
29	59001	**Rocker Assembly No. 2**—Includes Bush	4	
30	57109	**Pin Adjustment** $\frac{5}{16}''$ × 24 N.F.	8	
	57110	**Locknut** $\frac{5}{16}''$ × 24 N.F.	8	
31	44630	**Spring**—Rocker—Outlet	2	
32	60733	**Collar**—End—Rocker Shaft	2	
33	58334	**Pin**—Mills—Collar to Rocker Shaft	2	
34	61128	**Rod**—Valve Push	8	
35	57933	**Tappet**—Valve	8	
36	56551	**Valve**—Inlet	4	
	58636	**Valve**—Exhaust	4	
37	58705	**Washer**—Sealing	8	
38	58704	**Cage for Washer**	8	
39	56668	**Spring**—Valve	8	
40	58702	**Collar**—Valve Spring	8	
41	58703	**Cone**—Split	8 pr.	

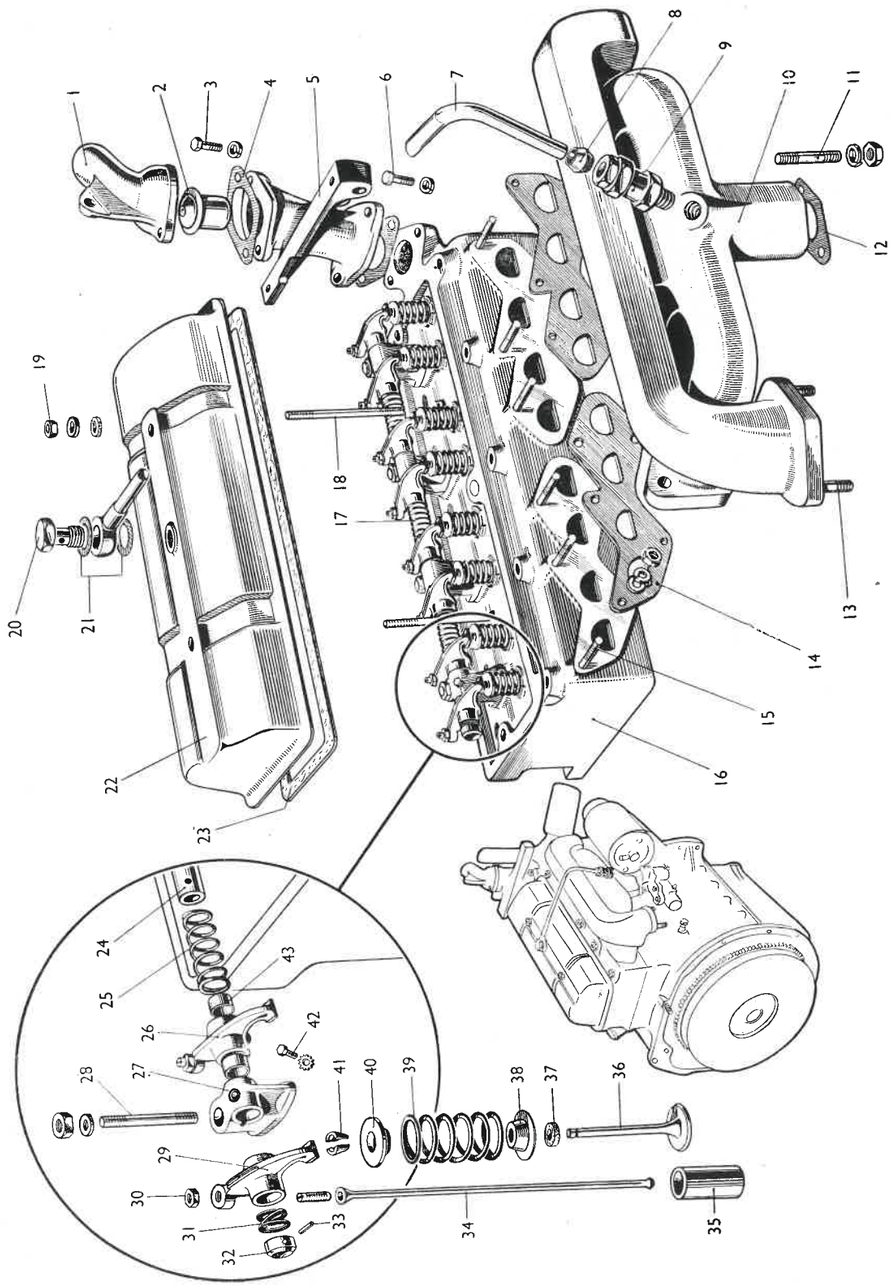

FIG. 38

Ref. No.	Part No.	Description	No. Off	Remarks
42	42880	**Screw**—Locking ¼″ B.S.F.	1	
	52337	**Washer**—C'sk Shakeproof—Ext.	1	
43	44370	**Bush**—Rocker	8	
		Not Illustrated.		
	55876	**Guide**—Inlet Valve	4	
	55877	**Guide**—Exhaust Valve	4	
	55878	**Tube**—Push Rod Sealing	8	
	27378	**Plug**—Core—1¾″ Dia.—Rear of Cylinder Head	1	
	59877	**Plug**—Core—1″ × 14 N.F.—Top of Cylinder Head ...	1	
	59886	**Washer**—Fibre—Rocker Oil Feed	1	
	38 CBH 38	**Screw**—Set	1	

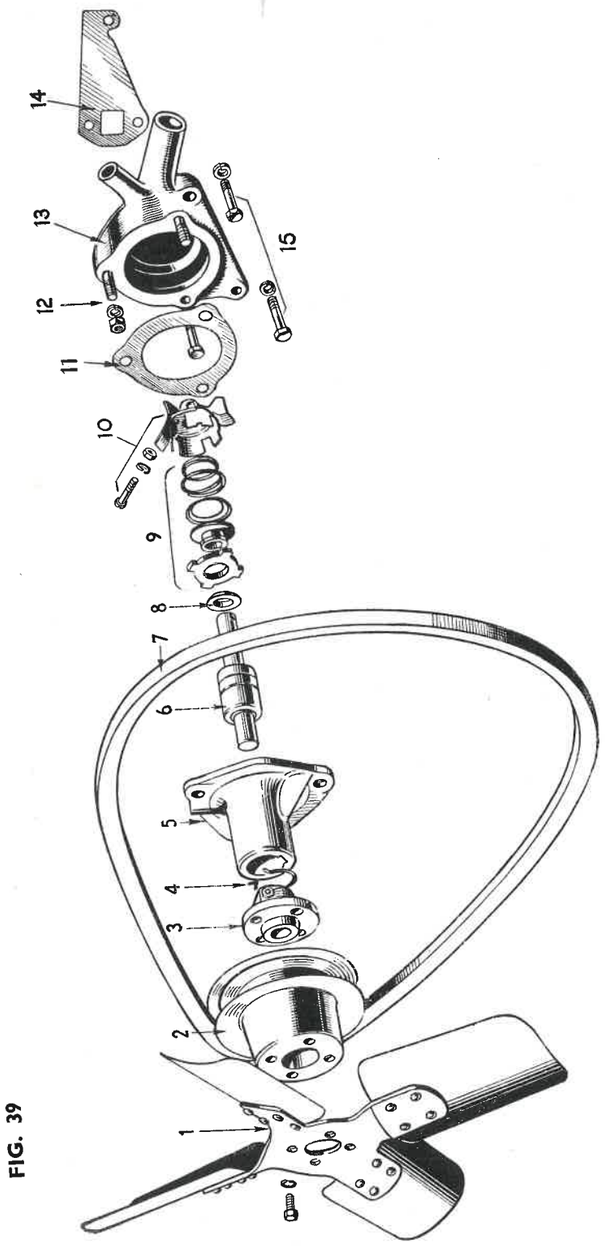

FIG. 39

Ref. No.	Part No.	Description	No. Off	Remarks
		FIG. 39. WATER PUMP ASSEMBLY AND FAN TE.A.20		
	58931	**Water Pump Assembly**—Comprising items 3, 4, 5, 6, 8, 9, 10, 11, 12 and 15.		
1	56541	**Fan Assembly**—Riveted	1	
	31 FBH 68	**Bolt** 5/16″ × 24 N.F. × 11/16″...	4	
	31 WL	**Spring Washer**	4	
2	57021	**Pulley Assembly**—Fan	1	
3	56513	**Hub**—Fan Pulley	1	
	31 FBH 138	**Bolt** 5/16″ × 24 N.F. × 1.3/8″	1	
	31 FNH	**Nut**	1	
	31 WL	**Spring Washer**	1	
4	56222	**Retainer**—Bearing	1	
	60537	**Housing and Bearing Assembly**—comprising items 4, 5, 6, and 8	1	
5	58865	**Housing**—Bearing	1	
6	56223	**Bearing**—Ball	1	
7	8628	**Belt**—Fan	1	
8	60313	**Seal**—Bearing	1	
9	56538	**Seal Assembly**	1	
10	60575	**Impellor**	1	
	59869	**Bolt**	1	
	59867	**Nut**	1	
	19 WL	**Spring Washer**	1	
11	56214	**Gasket**—Bearing Housing to Body	1	
12	56243	**Stud**—Bearing Housing to Body	2	
	38 FNH	**Nut**	2	
	38 WL	**Spring Washer**	2	
13	56182	**Body**—Water Pump	1	
14	56237	**Gasket**—Water Pump to Cylinder Block	1	
15	38 CBH 228	**Bolt**—Body to Cylinder Block	2	
	38 CBH 265	**Bolt**—Body to Cylinder Block	1	
	38 WL	**Spring Washer**	3	

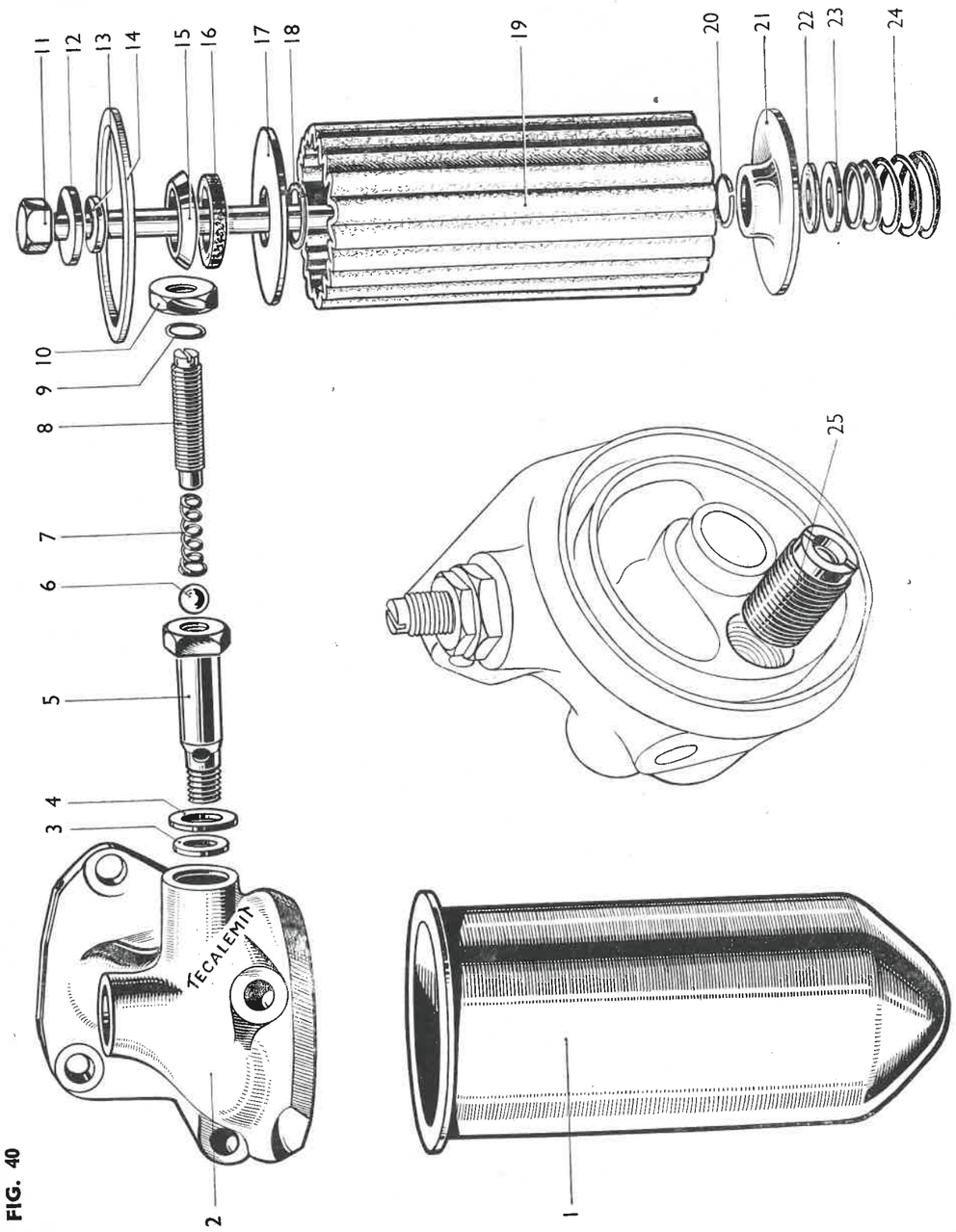

FIG. 40

Ref. No.	Part No.	Description	No. Off	Remarks
		FIG. 40. OIL FILTER (INCLINED) TE.A.20		
	59383	**Oil Filter Assembly**		
		Comprising :—		
1	59736	**Container Assembly**	1	
2	59733	**Head**—Filter Assembly	1	
3	*59308	**Washer**—Sealing	1	
4	59739	**Washer**—Steel	1	
5	*59615	**Body**—Relief Valve	1	
6	*59892	**Ball**—Relief Valve	1	
7	*60414	**Spring**—Steel Wire	1	
8	*60416	**Plug**—Adjustment Relief Valve...	1	
9	*30123	**Packing**—Lead	1	
10	*38054	**Locknut**—Relief Valve	1	
11	59734	**Bolt**	1	
12	*49325	**Washer**	1	
13	*49326	**Washer**—Sealing	1	
14	59737	**Washer**	1	
15	59740	**Washer**—Steel Dished	1	
16	59738	**Washer**—Felt	1	
17	49314	**Plate**—Clamping	1	
18	*49315	**"C" Spring**	1	
19	59384	**Element**	1	
20	49323	**"C" Spring**	1	
21	49321	**Plate**—Pressure	1	
22	49322	**Washer**	1	
23	49320	**Washer**	1	
24	59735	**Spring**—Steel Pressure Plate	1	
25	59741	**Valve Assembly**—Balance	1	

* Indicates Parts Common to Vertical Oil Filter.

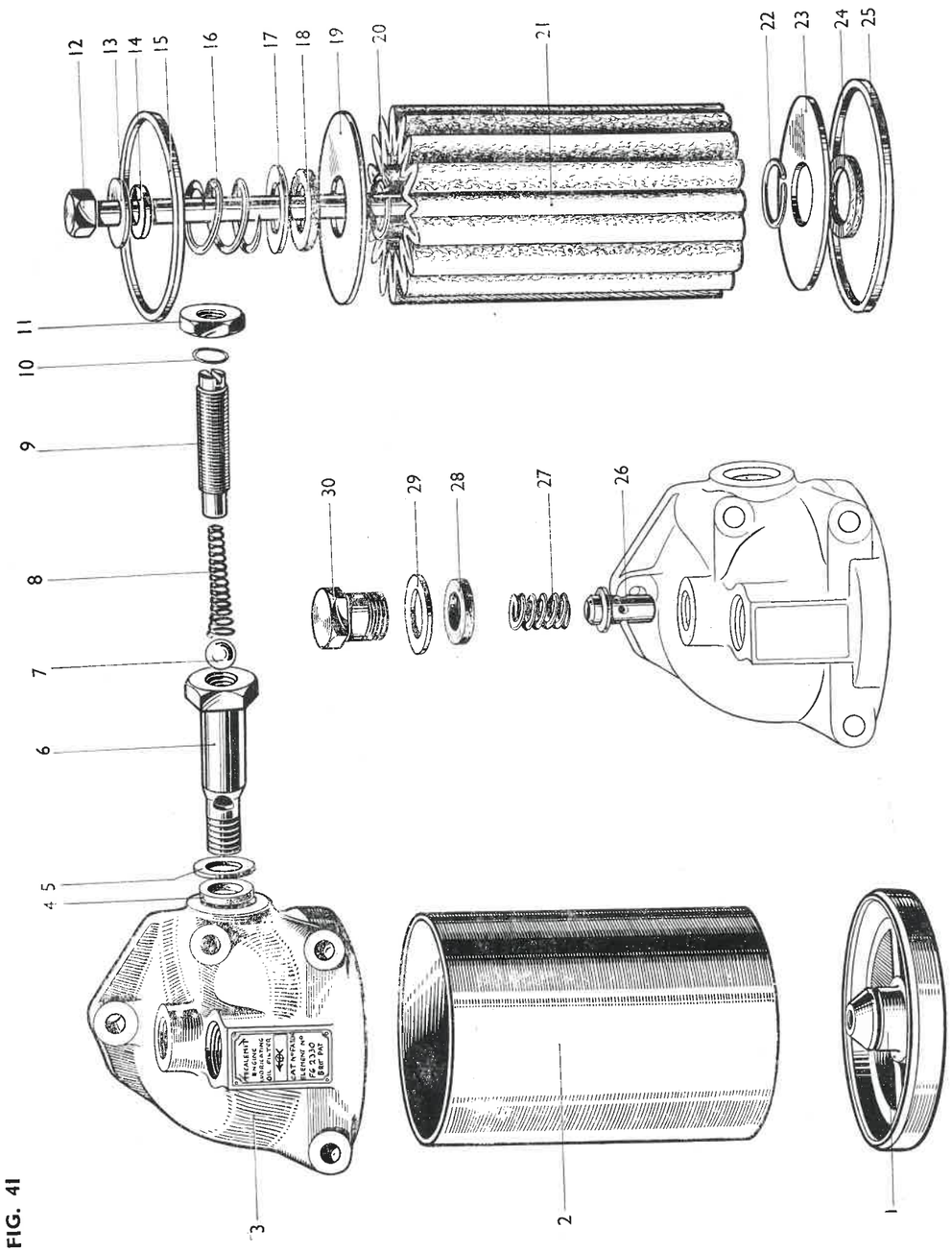

FIG. 41

Ref. No.	Part No.	Description	No. Off	Remarks
		FIG. 41. OIL FILTER (VERTICAL) TE.A.20		
	57765	**Oil Filter Assembly** Comprising :—	1	
1	59606	**Filter Base**	1	
2	59603	**Container**	1	
3	59559	**Head**—Filter	1	
4	*59608	**Washer**—Sealing	1	
5	59607	**Washer**	1	
6	*59615	**Body**—Relief Valve	1	
7	*59892	**Ball**—Relief Valve	1	
8	*60414	**Spring**—Steel Wire	1	
9	*60416	**Plug**—Adjustment—Relief Valve	1	
10	*30123	**Packing**—Lead	1	
11	*38054	**Locknut**—Relief Valve	1	
12	59600	**Bolt**	1	
13	*49325	**Washer**	1	
14	*49326	**Washer**—Sealing	1	
15	59611	**Washer**—Joint	1	
16	59601	**Spring**	1	
17	59602	**Washer**	1	
18	49316	**Washer**—Felt—see item 24	1	
19	59612	**Plate**—Pressure—see item 23	1	
20	*49315	**"C" Spring**—see item 22	1	
21	57766	**Element**	1	
22	*49315	**"C" Spring**—see item 20	1	
23	59612	**Plate**—Pressure—see item 19	1	
24	49316	**Washer**—Felt—see item 18	1	
25	59605	**Washer**—Joint	1	

* Indicates Parts Common to Inclined Oil Filter

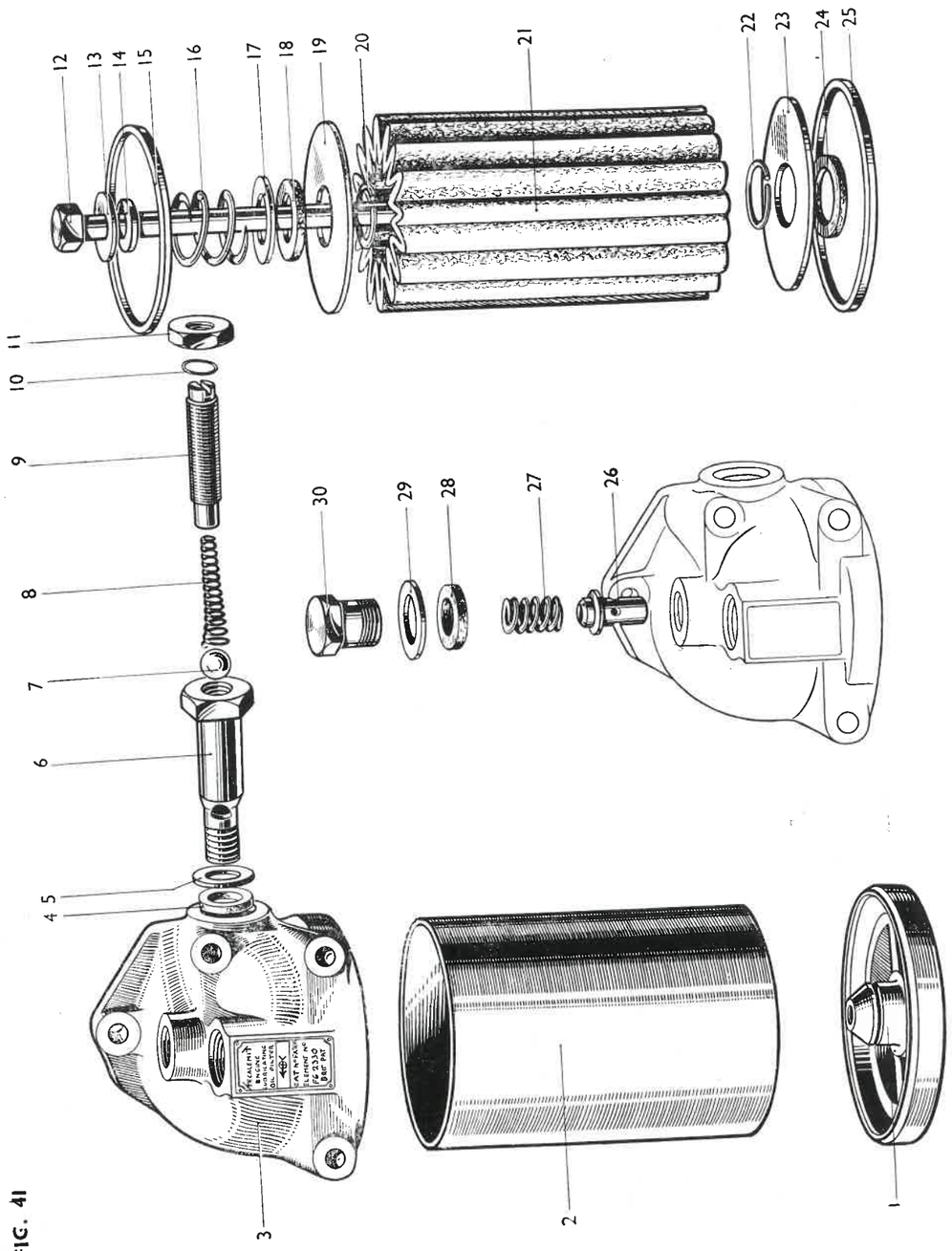

FIG. 41

Ref. No.	Part No.	Description	No. Off	Remarks
26	59617	**Valve**	1	
27	59610	**Spring**—Valve—Balance	1	
28	59616	**Washer**—Sealing	1	
29	59604	**Washer**	1	
30	59613	**Plug**	1	

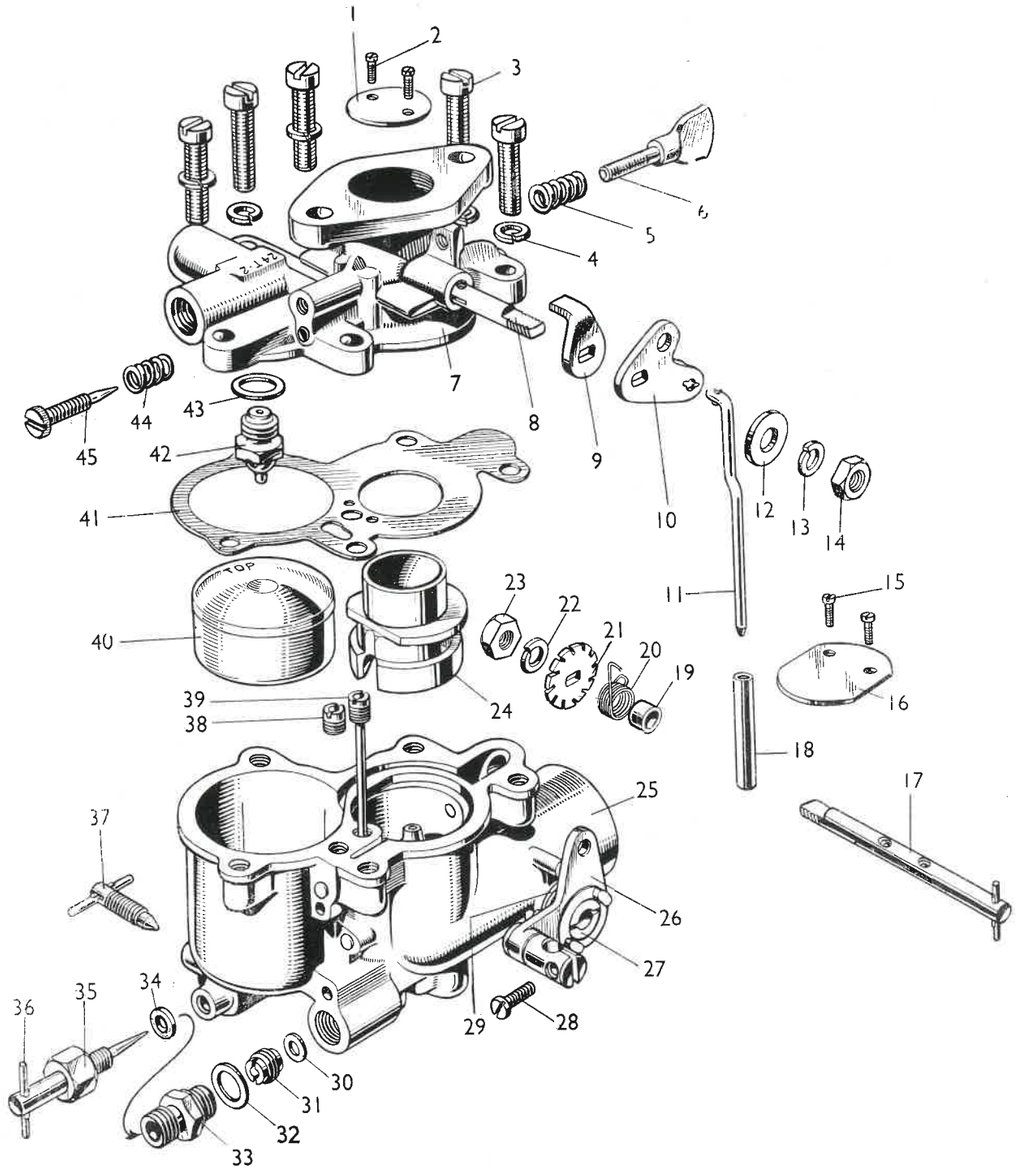

FIG. 42

Ref. No.	Part No.	Description	No. Off	Remarks
		FIG. 42. CARBURETTOR (ZENITH) TE.A.20		
	58191	**Carburettor Assembly** Comprising :—	1	
1	58518	**Throttle**	1	
2	58520	**Screw**—Throttle Fixing—see item 15....	2	
3	58533	**Screw**—Barrel to Bowl	5	
4	59628	**Washer**—Spring	5	
5	58525	**Spring**—Throttle Stop Screw	1	
6	58524	**Screw**—Throttle Stop	1	
7	58517	**Barrel**	1	
8	58519	**Spindle**—Throttle	1	
9	58521	**Stop**—Throttle	1	
10	58522	**Lever**—Combined Throttle and Interconnection	1	
11	58544	**Rod**—Interconnection	1	
12	58523	**Washer**—Spacing—Spindle	1	
13	59628	**Washer**—Spring	1	
14	59891	**Nut**—Throttle Spindle—see item 23	1	
15	58520	**Screw**—Strangler Flap—see item 2	2	
16	58539	**Flap**—Strangler	1	
17	58538	**Spindle and Pin**—Strangler	1	
18	58543	**Tube**—Interconnection	1	
19	58540	**Sleeve**—Spindle	1	
20	58541	**Spring**—Strangler Flap	1	
21	58542	**Plate**—Spring Anchor	1	
22	59628	**Washer**—Spring—Strangler	1	
23	59891	**Nut**—Strangler Spindle—see item 14	1	
24	58531	**Tube**—Choke—17m/m	1	
	59836	**Tube**—Choke—18m/m	as req	

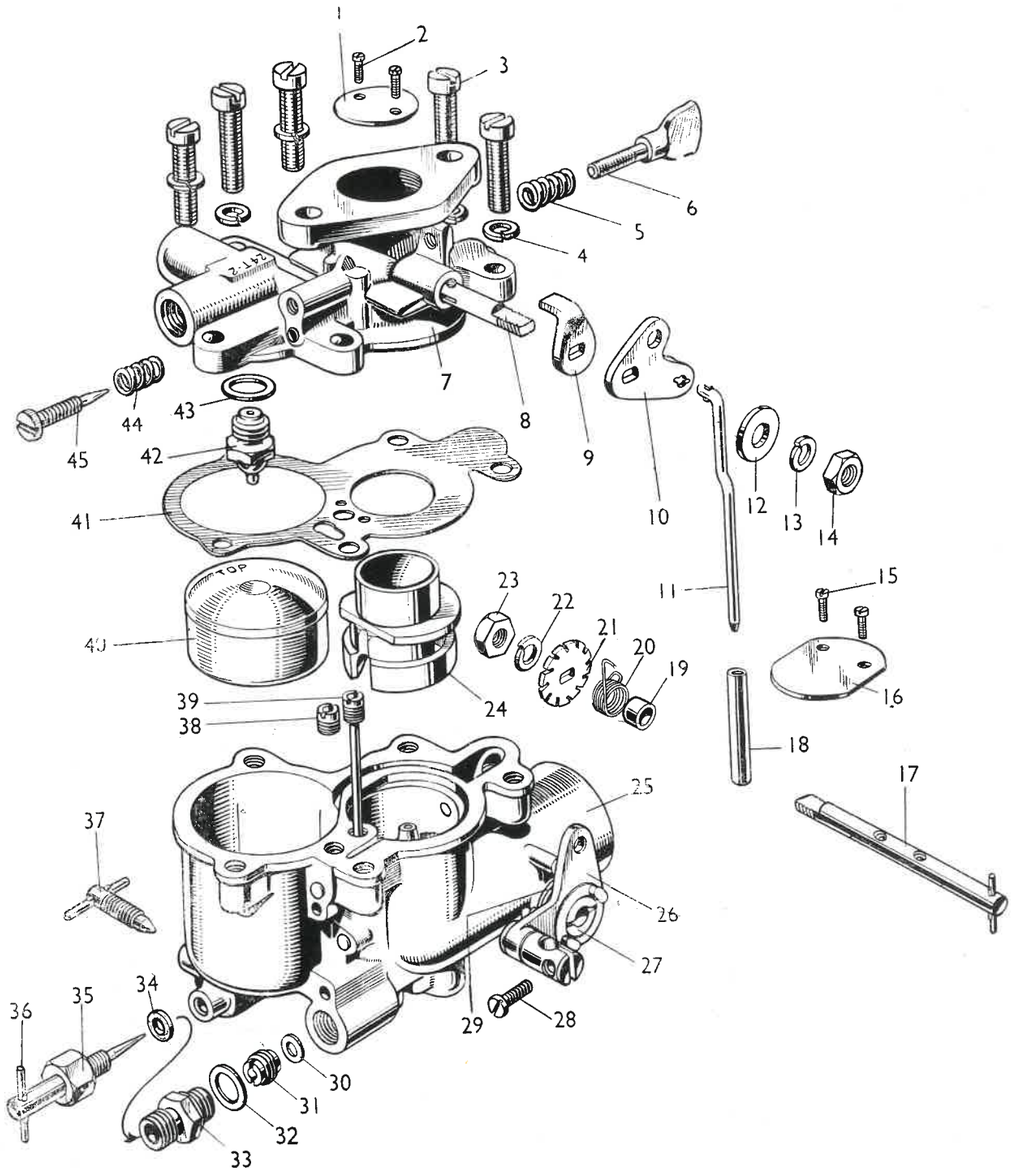

FIG. 42

Ref. No.	Part No.	Description	No. Off	Remarks
25	58537	**Bowl**	1	
26	58534	**Strangler with Swivel**	1	
27	58536	**Bearing**—Strangler Lever	1	
28	58545	**Screw**—Interconnection...	1	
29	58535	**Spring**—Strangler Lever	1	
30	58547	**Washer**—Main Jet	1	
31	58546	**Main Jet**	1	
32	59552	**Washer**—Main Jet	1	
	59551	**Main Jet Adjustment Assembly**—Comprising items 33 to 36 inclusive	1	
33	59629	**Adaptor**	1	
34	58549	**Packing**—Needle Valve	1	
35	58550	**Nut**—Packing	1	
36	58548	**Valve**—Needle—Main Jet	1	
37	59555	**Plug**—Drain Valve	1	
38	59554	**Jet**—Air	1	
39	59553	**Tube**—Slow Running	1	
40	58530	**Float**	1	
41	58532	**Gasket** (Barrel to Bowl)...	1	
42	58528	**Needle and Seating** 1.5 m/m.	1	
43	58529	**Washer**	1	
44	58527	**Spring**—Air Regulator Screw	1	
45	58526	**Screw**—Air Regulator	1	

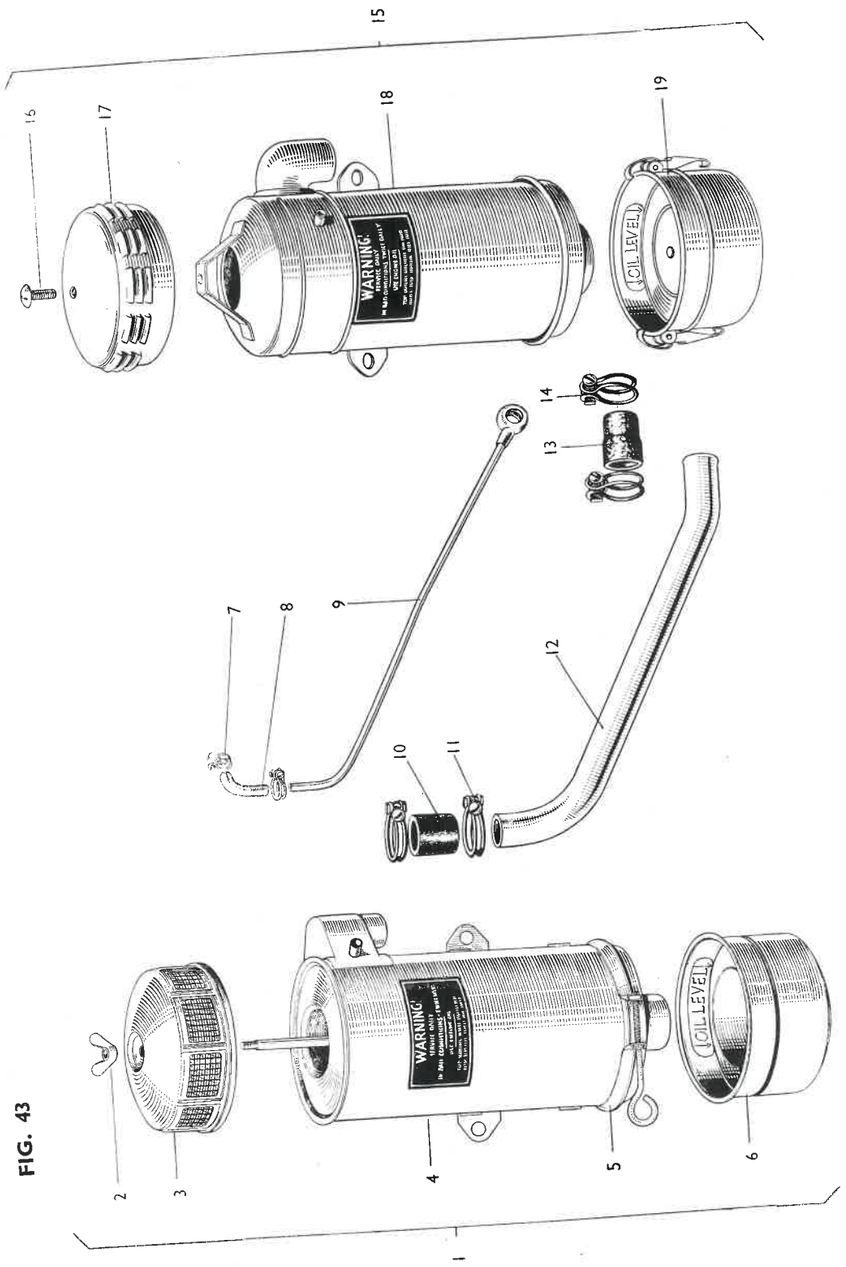

FIG. 43

Ref. No.	Part No.	Description	No. Off	Remarks
		FIG. 43. AIR CLEANER AND RELATED PARTS—TE.A.20.		
1	7156	**Air Cleaner Assembly**—A.C. Sphinx. Comprising items 2 through 6	1	
2	1807	**Nut**—Wing	1	
3	4260	**Cover**—Filter	1	
4	4275	**Filter Element, Body and Decal.**	1	
5	4262	**Clamp**—Oil Container	1	
6	4281	**Container**—Oil (with Plate)	1	
7	2073	**Clip**—Pipe	2	
8	1880	**Hose**—Moulded—3/4" O/Dia.	1	
9	8610	**Pipe Assembly**—Suction—Air Cleaner to Cylinder ...	1	
10	1326	**Hose**—Air Cleaner	1	
11	2070	**Clip**—Air Cleaner Hose (To suit 2" O/Dia.)	3	
12	8588	**Pipe**—Air Cleaner to Carburettor	1	
13	1575	**Hose**—Moulded—2" O/Dia. and 1.795" O/Dia.	1	
14	2072	**Clip**—Air Cleaner Pipe to Carburettor (to suit 1.795" O/Dia.)	1	
15	7168	**Air Cleaner Assembly**—Burgess. Comprising items 16 through 19.	1	
16	1877	**Screw**—Cover to Filter Body	1	
17	4277	**Cover**—Filter	1	
18	4279	**Filter Element, Body and Decal.**	1	
19	4280	**Container**—Oil—with Clamps and Plate	1	
		Not Illustrated.		
	9594	**Petrol Pipe Assembly**—Tank to Carburettor	1	
	1921	**Clip**—Petrol Pipe...	1	
	1922	**Half Clip**—Petrol Pipe	1	
	19FSR50	**Screw**—Rd. Head	1	
	19FNX	**Nut**	1	
	19WL	**Washer**—Lock	1	

	Part No.	Description	Figure	Page
	1001	BUSHING—HYDRAULIC LIFT	3	11
	1002	COVER—HYDRAULIC LIFT	2	7
	1004	PISTON—HYDRAULIC LIFT	3	11
	1005	SEAT—SPRING—HYDRAULIC LIFT	2	7
N.S.	1009	PLATE—FRICTION	2	7
	1010	SPRING WASHER—HYDRAULIC LIFT	2	7
	1011	GASKET	14	43
	1012	RING—LINCH PIN	5	17
	1013	SPRING—HYDRAULIC LIFT	3	11
	1015	KNUCKLE	6	19
	1017	GASKET	4	13
	1018	PLUG	4–16	13–51
	1020	WASHER—FELT—HYDRAULIC LIFT	2	7
	1022	BEARING ASSEMBLY	6	19
	1023	PIN	5	17
	1024	PLATE—LOWER	14	43
	1025	SHAFT	14	43
	1026	TUBE—OIL	13	39
	1027	PIN—LINCH	5	17
	1028	CHAIN, ANCHOR & LINCH PIN ASSEMBLY	5	17
	1032	LINCH PIN, CLIP & CHAIN ASSEMBLY	5	17
	1033	EYE BOLT	6	19
	1036	PIN	6	19
	1040	CLAMP	4	15
	1042	CAM—BLOCK	3–4	11–13
N.S.	1045	GUIDE—VALVE	4	15
	1046	SOCKET—VALVE GUIDE	4	15
N.S.	1047	VALVE—OUTLET	4	15
N.S.	1048	VALVE—INLET	4	15
	1050	SPRING	4	15
	1051	PLUG	4	13
	1053	CONTROL VALVE ASSY.	4	13
	1054	CLIP	4	13
	1055	STEM	4	13
	1056	BAR	4	13
	1057	SPRING	4	13
	1058	SPRING	4	13
	1059	BUSH	4	13
	1061	CHAIN ASSY.—DRAWBAR	5	17
	1062	FRICTION DISC—CONTROL LEVER	2	7
	1063	PISTON RING	3	11
	1064	SPRING	2	7
	1065	LOCK WASHER	3	11
	1066	GASKET	3	11
	1067	GASKET	3	11
	1068	CONNECTING ROD—HYD. LIFT	3	11
	1069	GASKET	2	7
N.S.	1070	GEAR	6	19
	1071	CLEVIS	6	19
	1072	CHAIN	6	19
	1074	LOCK WASHER	3	11
	1075	GASKET	7	21
	1076	GASKET	14	41
	1077	GASKET	13	39
	1078	SCREW	15	45
	1079	THRUST WASHER	15	45
	1081	THRUST WASHER	15	45
	1086	LOCKING RING	15	45
	1087	LOCKNUT	15	47
	1088	WASHER—THRUST	15	47
	1090	WASHER—THRUST	18	59
	1091	WASHER—THRUST	18	57
	1092	SHAFT—REVERSE	18	59
	1094	WASHER—THRUST	18	59
	1096	PIN	17	53
	1099	SUPPORT—HYD. LIFT	2	7
	1100	HUB—P.T.O. CLUTCH	8	23
	1101	SPRING	4	15
	1102	SPRING	4	15
	1103	STOP—SHIFTER—P.T.O.	8	23
	1104	FORK—SHIFTER—P.T.O.	8	23
	1105	CAP—P.T.O.	7	21
	1106	LEVER	8	23
	1109	BEARING—P.T.O.	7–8	21–23

	Part No.	Description	Figure	Page
	1110	BEARING—SPINDLE	31–32	111–115
	1112	BEARING—CLUTCH PILOT	21–34	73–121
N.S.	1116	WIRE—LOCKING	15	45
	1120	BOLT	32	115
	1121	CAP	32	117
	1126	WASHER	31–32	111–117
	1127	BUSHING—CENTRE	31	111
	1128	BUSHING—SPINDLE	31–32	111–113–115
	1134	SNAP RING	7–8	21–23
	1135	BASE ASSY.—HYD. PUMP	4	13
	1136	VALVE CHAMBER ASSY.	4	15
	1137	VALVE CHAMBER ASSEMBLY	4	15
	1139	INDICATOR—OIL LEVEL	13	39
	1142	PIN	15	47
	1144	PLUG	4	13
	1145	STUD	14	43
	1146	WASHER	16	51
	1148	NUT	3	11
	1150	PLUG	4–32	13–115
	1151	NUT	5–14	17–41
	1152	STUD	2	7
	1153	WING NUT	2	9
	1155	EXPANSION PLUG	6	19
	1156	SOCKET ASSEMBLY—R.H.	31	109
	1164	NUT	6	19
	1165	NUT—CASTLE—SPINDLE	31–32	111–117
	1170	GASKET	4–16	13–51
	1174	COLLAR	14	41
	1181	CLAMP	31	109
	1184	BOLT	5	17
	1185	PLUG—EXPANSION	14	41
	1186	RIVET	15	45
	1187	STUD	14	41
N.S.	1188	SLEEVE	7	21
	1189	DOWEL—BASE—HYD PUMP	4	13
	1190	OIL SEAL	7	21
	1191	SLEEVE	7	21
	1192	RAIL—SHIFTER P.T.O.	8	23
	1193	PULLEY ATTACHMENT ASSY.	9	25
	1194	OIL SEAL	9	25
	1195	OIL SEAL	9	25
	1196	BALL	8	23
	1199	PLUG	9	25
N.S.	1200	BUSH	18	57–59
	1203	FUEL VALVE & GLAND ASSY.	28	95
	1205	FILTER GASKET	28	95
	1206	FILTER GAUZE	28	95
	1207	FILTER BOWL	28	95
	1209	FILTER BOWL RETAINER ASSEMBLY	28	95
	1221	BOLT—CARRIAGE	1	5
	1224	SCREW—SET	18	57
N.S.	1225	BUSH	18	59
	1226	SPRING	8	23
	1227	RETAINER	18	57
	1228	GASKET	18–19	59–61
	1229	LOCKWASHER	15	47
	1230	OIL SEAL	19	61
	1231	SHIM .003″	18	57
	1232	SHIM .004″	18	57
	1233	SHIM .007″	18	57
	1234	SHIM .010″	18	57
	1235	SHIM .020″	18	57
	1236	SHIM .005″	18	57
	1237	SHIM .012″	18	57
	1238	RETAINER	18	59
	1240	BUSH FOR ROCKER	5	17
	1241	KEY—WOODRUFF—CAMSHAFT	2–21	7–71
	1243	WASHER—SPECIAL	8	23
	1245	PLUG—DRAIN	13–16–19	39–51–63
	1246	PLUG—CORE	19	61
	1247	STUD	19	63
	1249	STUD	13	39
	1251	BEARING	16	49
	1254	RETAINER	16	49
	1255	OIL SEAL	16	49
	1256	RETAINER	16	49
	1257	CAP	16	49
	1258	WASHER	16	49
	1259	SPRING	16	49

NOTE : N.S. indicates—NOT SERVICED. Part number appears in this book for reference only.

	Part No.	Description	Figure	Page
	1260	SPRING	17	55
	1261	SEAT—SPRING	17	55
	1262	WING—NUT—BATTERY ANCHOR	29	97
	1264	NUT—DOMED	16	49
	1265	LOCKNUT	16	49
	1268	NUT	14	41
	1270	COVER	17	53
	1271	WASHER—LOCK	16	49
	1273	KEY—WOODRUFF No. 9	16-34	49-123
	1274	CLAMP	33	118
	1276	HALF CLIP—LOWER	33	118
	1277	CLIP—INLET PIPE	33	118
	1278	STOP—REVERSE SHAFT	18	59
	1279	BUSH	16	51
	1280	BUSH	16	51
	1287	SPRING	19	61
	1289	BUSHING	14	41–43
	1291	GEAR	29	99
	1292	STEADY—PISTON	4	13
	1296	PIN	29	99
	1297	BALL .5″ DIA.	17	53
	1298	PLUNGER	17	53
	1299	SPRING	17	53
	1300	TOGGLE LEVER	29	99
	1301	LINK	29	99
	1302	OIL SEAL	17	55
	1303	SHAFT	12	37
	1309	BUSH	12	35
	1310	SCREW	14	41
	1311	ATTACH. PLATE ASSY.	29	101
	1312	PAWL	12	35
	1316	BRAKE ROD	12	37
	1317	FORK END	12	35
	1321	BUSHING	19	61–63
	1322	BUSH	19	61–63
	1324	GASKET	24	83
N.S.	1325	PLUG	29	97
	1326	HOSE	28–43	95–155
	1332	CLIP	28	95
	1333	DRAIN COCK	21–30	77–107
N.S.	1334	BOLT	30	107
	1335	OIL PRESSURE GAUGE	16	51
	1337	HOSE	30	107
	1338	PACKING	30	107
	1343	KEY	12	35
	1351	STRUT	19	63
	1352	FLANGE—STRUT	19	63
	1360	SCREW	30	103
	1361	PLUNGER	17	53
	1364	SCREW	30	105
	1365	SPRING	26	89
	1366	SPRING	26	88–89
	1370	LINK	26	89
N.S.	1371	BUSH	26	88
N.S.	1373	ARM	26	88
	1375	ROD	26	89
	1377	PLUNGER	26	89
	1379	BALL—JOINT—MALE	16–26	49–89
	1380	BALL JOINT—FEMALE	26	89
	1383	CLIP	33	118
	1385	BOLT	10	29
	1388	ADJUSTING SCREW	16	51
	1389	PLUG	24	83
	1390	GASKET	24	83
	1391	SPRING	21–26	67–89
	1395	WRENCH	29	101
	1396	WRENCH—ADJUSTABLE	29	101
	1397	TUBE SPANNER	29	101
	1398	TOMMY BAR	29	101
	1399	SCREW DRIVER	29	101
	1400	NUT	5	17
	1401	PLIERS	29	101
	1402	WASHER	5	17
	1415	NAME PLATE	30	103
	1416	WASHER	16	49
	1417	PLUG	17	55
	1420	IGNITION COIL BKT. ASSY.	29	99
	1423	CLIP	30	105
	1424	PACKING	30	105

	Part No.	Description	Figure	Page
	1428	KNOB	26	89
	1429	HANDLE ASSEMBLY	30	103
N.S.	1430	SHAFT—HANDLE	30	103
	1431	FERRULE	30	103
	1432	NUT—SPECIAL	30	103
	1433	LEVER L.H.	30	103
	1434	LEVER R.H.	30	103
N.S.	1435	CATCH L.H.	30	103
N.S.	1436	CATCH R.H.	30	103
N.S.	1437	WASHER	30	103
N.S.	1438	PIVOT	30	103
N.S.	1439	COLLAR	30	103
N.S.	1440	SPRING	30	103
	1445	CLAMP	26	89
	1446	LEVER	26	89
	1447	"U" BOLT	26	89
	1448	WASHER	26	88
	1449	TUBE SPANNER	29	101
	1450	SCREW	30	103
	1454	SOCKET ASSEMBLY R.H.	31	109
	1455	SOCKET ASSEMBLY L.H.	31	113
	1456	SPACER	17	53
	1457	STOP PLATE	17	53
N.S.	1472	FOOT R.H.	30	105
N.S.	1473	FOOT L.H.	30	105
	1474	PLUNGER	17	53
	1475	STUD	19	63
	1476	KEY—WOODRUFF	31–32	111–115
	1477	BOLT	2	7
	1478	UNION—OIL PIPE	21	77
	1479	YOKE END	26	89
	1480	ROD CONTROL	26	89
	1481	STUD	16	51
	1482	BOLT	18	59
N.S.	1483	BUSH	18	59
	1484	BOLT	4	15
	1485	WASHER	18	59
	1488	FORK END	12	37
	1502	SHIM .002″	13	39
	1503	SHIM .003″	13	39
	1504	SHIM .005″	13	39
	1505	STUD	13	39
	1507	STUD	17	55
	1509	SEAL	31–32	111–115
	1514	NUT—SLOTTED	17	55
	1515	STOP ASSEMBLY L.H.	12	37
	1516	STOP ASSEMBLY R.H.	12	37
	1518	BRAKE ROD	12	37
	1519	ADJUSTER ASSEMBLY	11	31
	1520	ADJUSTER PINION	11	31
	1521	ADJUSTER SCREW L.H.	11	31
	1522	ADJUSTER SCREW R.H.	11	33
	1523	NUT	11	31
	1525	WASHER LOCK	11	31
	1526	PIN COTTER	11	31
	1527	STRUT	11	31
	1528	STEADY POST	11	31
	1529	NUT	11	31
	1530	CAM PLATE & BLOCK	11	31
	1531	BOLT	11	33
	1532	WASHER	11	33
	1533	WASHER—LOCK	11	33
	1534	NUT	11	33
	1535	COLLAR	11	31
	1536	SET SCREW	11	31
	1537	CROWN WHEEL	11	31
	1538	BALL	11	31
	1539	RETAINER	11	31
	1540	WASHER—LOCK	11	33
	1541	LOCK RING	11	33
	1542	WASHER	11	31
	1544	SPRING	11	33
	1547	SCREW—SPECIAL	16	51
	1564	CAP FILLER	30	105
	1565	GUIDE & VALVE ASSEMBLY	4	15
	1566	PIN	21–22	67–79
	1567	ROD—RADIATOR—TIE	30	105
	1568	HOSE—TOP	30	107
	1569	PIN—FRONT AXLE	31	113
	1574	GASKET—EXHAUST FLANGE	33	119
	1575	HOSE—MOULDED	43	155

NOTE : N.S. indicates—NOT SERVICED. Part number appears in this book for reference only.

Part No.	Description	Figure	Page
1576	WASHER	4	13
1578	OIL SEAL	16	51
1583	STUD	19	63
1586	STUD	13–19	39–63
1608	STUD	19–21	61–69
1609	STUD	21	67–69
1610	LEVER	26	89
1615	SCREW	21	69
1616	SCREW	21	75
1617	SCREW	21	75
1618	STUD	21	67
1619	WASHER	21	75
1621	PIN	21	71
1623	PLUG	21	73
1624	PLUG	24–25	85–87
1625	WASHER	21	67
1626	STUD	21	67
1627	STUD	24	85
1628	NUT	21	67
1629	RING	21–22	67–79
1630	SCREW	21	71
1631	WASHER—LOCK	21	71
1632	NUT	21	71
1633	WASHER	21	71
1634	SCREW	21	69
1637	STUD	21	73
1638	NUT	21	73
1640	PIN	24	83
1641	SCREW	24	83
1642	WASHER	24	83
1643	NUT	21–24–25	77–83–87
1644	WASHER	21–24	77–83–85
1645	GASKET	21–24	77–83
1647	SCREW	21	75
1648	PIN	21	73
1649	PIN	21	73
1651	WASHER—FELT	21	75–77
1652	WASHER—FELT	21	75–77
1653	SCREW	21	75
1654	GASKET	21	75–77
1655	GASKET	21	75–77
1657	SCREW	25	87
1658	STUD	25	87
1659	STUD	21	77
1660	STUD	21	77
1661	NUT	25	87
1663	SCREW & LOCK WASHER ASSEMBLY	25	87
1664	SCREW & LOCK WASHER ASSEMBLY	21	71
1665	STUD	21	67
1666	KEY	21	71
1667	NUT	24	85
1668	GASKET	27	91
1669	WASHER	27	91
1670	SCREW	21	69
1671	WASHER—LOCK	21–25	69–87
1672	PIN	21	67
1673	PIN	21	67
1674	STUD	27	91
1676	DOWEL—RING	21	73
1677	PACKING	21–22	67–77–79
1678	INSERT	23–24	81–85
1680	BOLT	21–22	77–79
1681	LOCK	21–22	77–79
1682	BUSHING	21–22	67–77–79
1683	PLATE	21	71
1684	PLUG	21	73
1685	PLATE	21	71
1686	WASHER	21	71
1687	SHIM .002″	21	71
1688	SHIM .008″	21	71
1689	THROWER—OIL	21	71
1690	JAW	21	71
1691	SEAL	21	67–77
1692	RETAINER	21	69
1695	GASKET	21	69–77
1696	ROD	23	81
1697	TUBE	23–24	81-85
1698	TAPPET	23	81
1701	VALVE	23–24	81–85

Part No.	Description	Figure	Page
N.S. 1703	ARM ASSEMBLY	23	81
1704	GUIDE	23–24	81–85
N.S. 1705	ARM ASSEMBLY	23	81
1707	SPRING	23–24	81–85
1708	RETAINER	23–24	81–85
1709	SCREW	23	81
1710	LOCK—RETAINER	23–24	81–85
1711	SPRING	21–24	75–83
1712	SPRING	24	83
1714	PLUG	24	83
1715	SUPPORT	24	83
1716	STUD	24	83–85
1717	CAP	23–24	81–83
1723	SHIM	21	73
1724	COVER	21	73
1725	GEAR	21	73
1726	GEAR	21	73
1727	BUSHING	21	73
N.S. 1728	GEAR	21	73
1729	TUBE ASSEMBLY	21	75
1730	GASKET	21	73–77
1731	VALVE	21	75
1732	RETAINER	21	75
1733	PLUG	21	73
1734	STUD	21	73
1735	GEAR & SHAFT ASSEMBLY	21	73
N.S. 1736	SHAFT	21	73
N.S. 1737	NUT	21	75
1738	SLEEVE	21	75
1739	ELBOW	21	75
1740	ELBOW	21	73
1741	SUPPORT	21	73
1742	TUBE ASSEMBLY	21	75
1743	TUBE	21	75
1744	SPRING	21	75
1745	NUT	21	75
1746	PLUG	21	75
1747	PACKING	21	73–77
1748	ROD ASSEMBLY	21	69
1751	FELT	21	69–77
1752	SUPPORT	21	69
1754	CAP ASSEMBLY	21	67
1756	GASKET	21–25	77–87
1757	SHAFT ASSEMBLY	25	87
N.S. 1758	IMPELLOR	25	87
N.S. 1760	HOUSING	25	87
1761	RING	25	87
1762	RING	25	87
1763	SLINGER	25	87
1764	HUB—FAN	25	87
1765	SEAL	21	67–77
1767	SEAL	21	67–77
1768	ARM	21	67
1769	SHAFT	21	67
1770	WEIGHT ASSEMBLY	21	71
N.S. 1771	INSERT	21	71
1772	PIN	21	71
1773	CUP & SHAFT ASSEMBLY	21	69
1776	BEARING	21	67
1777	SEAL	21	67–77
1778	SPRING	21	67
1779	SCREW	21	67
1780	WASHER	21	67
1781	SEAL	21	69–77
1782	ROD	30	105
1783	ROCKER ARM R.H.	23–24	81–83
1784	ROCKER ARM L.H.	23–24	81–83
N.S. 1786	TUBE	21	75
N.S. 1788	WEIGHT	21	71
N.S. 1790	LEVER	21	69
N.S. 1791	BOSS	21	69
1794	GASKET	21	77
1797	SPRING	26	89
1798	PAD—VALVE BALL	4	13
1799	OIL PRESSURE GAUGE	16	51
1800	SAFETY VALVE	4	13
1801	RETAINER	4	13
1803	STOP ASSEMBLY	2	9
1804	CLAMP	16	51
1805	NUT	16	51
1806	WASHER—LOCK	16	51

NOTE N.S. indicates—NOT SERVICED Part number appears in this book for reference only.

Part No.	Description	Figure	Page
1807	WING NUT	28–43	95–155
1809	PLATE—COVER	30	107
1813	CLIP	28	95
1814	SPANNER—TUBE	29	101
1815	WING—NUT	2	9
1821	LINKAGE L.H.	12	35
1822	LINKAGE R.H.	12	35
1824	TRANS. CASE	19	61
1825	WASHER—BRAKE	12	35
1826	WASHER—BRAKE	12	35
1827	ANCHOR—R.H.	6	19
1828	ANCHOR—L.H.	6	19
1830	LOWER STEERING HOUSING ASSEMBLY	16	51
1834	CARBURETTOR BODY ASSEMBLY	27	91
1835	SCREW	27	91
1836	GASKET	27	93
1837	NOZZLE	27	93
1838	JET—POWER	27	93
1839	RATCHET	27	91
1840	SPRING	27	93
1841	SPRING	27	91
1842	NEEDLE	27	91
1843	CHOKER SHAFT & LEVER ASSEMBLY	27	93
1844	CHOKER FLY ASSEMBLY	27	93
1845	FLOAT & LEVER ASSEMBLY	27	91
1846	ELBOW & SCREEN ASSEMBLY	27	91
1847	WASHER	27	91
1848	SHAFT, FLOAT & LEVER	27	91
1849	GASKET	27	91
1850	FLOAT VALVE, SEAT & GASKET ASSEMBLY	27	91
1851	HIGH SPEED NEEDLE ASSY.	27	91
1852	GASKET	27	91
1853	SCREW	27	91
1854	SCREW	27	93
1855	SPRING	27	91
1856	THROTTLE STOP & LEVER ASSEMBLY	27	93
1857	FLY—THROTTLE	27	91
1858	VENTURI	27	93
1859	SCREW	27	91
1860	SPRING	27	93
1861	CUP	27	93
1862	RETAINER	27	93
1863	JET—IDLE	27	93
1864	GASKET	27	93
1865	SCREW	27	93
1866	PACKING	27	91
1867	PACKING	27	93
1869	STRAINER	27	93
1870	RETAINER	27	91
1871	PLUG	27	93
1872	GASKET ASSY.—SERVICE	27	93
1873	SELECTOR	27	93
1876	CROWN WHEEL, DRIVING PINION ETC.	17	53
1877	SCREW	15	47
1880	HOSE—MOULDED	28–43	95–155
1885	STUD	43	155
1886	RUBBER BOOT	14	41
1887	RUBBER BOOT	31	109–113
1888	CIRCLIP	31	109
1897	FILLER CAP	31	109
1903	BUTTON—AXLE SHAFT	30	105
N.S. 1905	GEAR	14	41
1910	DOWEL	6	19
1911	WASHER	21	67
1912	ROD — ARM — GOVERNOR LEVER	21	71
1917	WASHER	25	89
1918	GEAR—P.T.O. ASSEMBLY	26	88
1919	CLIP—CABLE	9	27
1920	GASKET—FRONT HUB	29	99
1921	CLIP—PETROL PIPE	32	117
1922	HALFCLIP—PETROL PIPE	43	155
1923	BOOT—RUBBER	43	155
1925	SHAFT & GEAR ASSEMBLY	31	109–113
1934	LINCH PIN & CHAIN ASSY.	6	19

Part No.	Description	Figure	Page
1935	CHAIN ASSY.—UPPER LINK PIN	5	17
1940	GASKET	30	105
1941	SCREW	30	107
1943	GASKET	17	55
1944	SEAL—RUBBER	16–30	49–105
1954	BRACKET — EXHAUST PIPE CLIP	33	119
1955	CLIP—EXHAUST PIPE	33	119
1975	PIN—CLEVIS	12	37
1976	NUT—WHEEL—FRONT	32	115
1977	PIN—CLEVIS	3	11
1978	SOCKET ASSEMBLY—FRONT R.H. & L.H.	31	109
1979	SOCKET ASSEMBLY R.H.	31	109
1980	SOCKET ASSEMBLY L.H.	31	113
1984	CLAMP	31	109
1993	NUT	9	25
1994	PIN	17	53
1999	NUT—SIMMONDS	11	31
2012	INSTRUMENT PANEL—COMPLETE	16	49
2048	SEAL—OIL	32	115
2050	ROD—LINK ASSEMBLY	26	88
2057	CONNECTOR & COUPLING	18	57–59
2070	CLIP—HOSE	43	155
2071	CLIP—PIPE	30	107
2072	CLIP—PIPE	30–43	107–155
2073	CLIP—PIPE	43	155
2082	GASKET	21–23–24	77–81–85
2083	GUARD	23–24	81–85
2112	THROTTLE ROD ASSEMBLY	26	88
2113	THROTTLE ROD ASSEMBLY	26	88
2165	SLEEVE ASSEMBLY—DRIVING PINION	15	45
2171	SEAL—OIL	14	41
2177	CIRCLIP—SLEEVE	7	21
2181	GASKET	4	13
2182	ROCKER WITH BUSH	5	17
2184	BOLT—RIM TO DISC	10	29
2199	SPRING	25	89
4002	LEVELLING BOX ASSEMBLY	6	19
4004	FORK	3	11
4007	LEVELLING BOX	6	19
4008	FORK	6	19
4009	PISTON	4	13
N.S. 4010	VALVE CHAMBER R H	4	15
N.S. 4011	VALVE CHAMBER L.H.	4	15
N.S. 4013	LEVER ASSEMBLY	2	9
4016	CONTROL LEVER & FRICTION PLATE ASSEMBLY	2	9
N.S. 4018	SHAFT	6	19
4019	OIL TROUGH ASSEMBLY	13	39
4022	SPIDER—DIFFERENTIAL	15	45
4023	BEARING ASSEMBLY	14	43
N.S. 4024	CONE & ROLLER	14	41
N.S. 4025	CUP	14	41
4028	DRIVE SHAFT ASSEMBLY	13	39
N.S. 4030	DRIVING PINION ASSEMBLY	15	45
4031	BEARING ASSEMBLY	15	45–47
N.S. 4032	CUP	15	47
N.S. 4033	CONE & ROLLER	15	45–47
4034	BEARING	15	45
4039	GEAR	18	57
4040	GEAR	18	59
N.S. 4041	GEAR	18	59
4042	GEAR ASSEMBLY	18	59
4043	COUPLING	18	59
N.S. 4044	GEAR	18	59
4045	CAM—HYD. LIFT	4	13
4057	SHAFT	18	57
4058	SLEEVE	8	23
4059	COVER—P.T.O.	7	21
4060	SHAFT	9	25
4061	BEARING ASSEMBLY	9	27
N.S. 4062	CONE & ROLLER	9	25
N.S. 4063	CUP—BEARING	9	25
4064	BEARING ASSEMBLY	9	27
N.S. 4065	CONE & ROLLER—P T.O.	9	25
N.S. 4066	CUP—BEARING	9	27
4067	BEARING ASSEMBLY	32	117

NOTE N.S. indicates—NOT SERVICED. Part number appears in this book for reference only

	Part No.	Description	Figure	Page
	4069	BEARING	19	61
	4070	BEARING ASSEMBLY	32	117
	4073	BEARING ASSEMBLY	18	57–59
N.S.	4075	CUP BEARING	18–19	57–59–61
	4076	BEARING ASSEMBLY	18	57
	4078	LEVER—LEVELLING	6	19
	4079	BEARING ASSEMBLY	15	45
N.S.	4080	CONE & ROLLER	15	45
N.S.	4081	CUP—BEARING	14–15	43–45
	4082	GASKET	4	13
	4083	COVER ASSEMBLY	13	39
N.S.	4085	CONE & ROLLER	18	57–59
N.S.	4086	CONE & ROLLER	32	115
N.S.	4087	CONE & ROLLER	32	115
N.S.	4088	CUP—BEARING	32	117
	4089	PIN	31	113
	4090	ARM—SPINDLE	31–32	111–113–115
N.S.	4098	CUP—BEARING	32	115
	4099	SHIM .003″	14	41
	4100	SHIM .005″	14	41
	4101	SHIM .010″	14	41
	4102	COVER—P.T.O.	9	27
	4103	GASKET	9	27
	4104	GASKET	9	27
	4105	GASKET	9	27
	4109	GEAR ASSEMBLY	18	59
	4111	CLIP—MUFFLER	33	118
	4112	GASKET	14	41
	4114	PIN ASSEMBLY	5	17
	4115	RETAINER	14	41
	4117	SHAFT & PINION	16	49
	4118	SPACER	12	35
	4119	HUB	19	61
	4120	CAP	12	35
	4127	FORK	12–19	37–61
	4134	BOLT—BATTERY ANCHORAGE	29	97
	4137	SHIM .002″	15	47
	4138	SHIM .003″	15	47
	4145	SECTOR PAWL	12	35
	4149	SELECTOR	17	53
	4153	CAP	30	105–107
N.S.	4156	ROD THROTTLE	26	88
	4161	WRENCH	29	101
	4164	HANDLE—STARTING	29	101
	4167	HOOD SIDE RUNNER ASSY.	30	105
N.S.	4168	ROD—CHOKE	26	89
	4169	CHOKE CONTROL ROD ASSY.	26	89
	4170	CATCH ASSEMBLY L.H.	30	103
	4171	CATCH ASSEMBLY R.H.	30	103
	4174	SHIFTER RAIL	17	53
	4176	SHIFTER RAIL	17	53
	4177	SHIFTER RAIL	17	53
	4178	STOP PLATE	17	55
	4183	PIN, ANCHOR & PLATE	11	31
	4184	CENTRALISER L.H.	11	33
	4185	CENTRALISER R.H.	11	33
	4186	SHAFT CONTROL & CRANK	11	31
	4187	BEARING	11	31
	4188	SPRING	11	31
	4189	SPRING	11	31
	4201	SHAFT—HYD. LIFT CONTROL	2	7
	4206	PINION—DIFF.	15	45
N.S.	4207	SLEEVE—CYLINDER	21–22	67–79
	4211	BEARING	21–22	77–79
	4211/2	BEARING .020″ UNDERSIZE	22	79
	4211/3	BEARING .030″ UNDERSIZE	22	79
	4211/4	BEARING .040″ UNDERSIZE	22	79
	4212	GEAR TIMING CAMSHAFT	21	71
	4213	GEAR TIMING CRANKSHAFT	21	71
	4214	BEARING	21	73
	4215	BEARING	21	73
N.S.	4217	WIRE LOCK	21	73
	4222	GEAR STARTER RING	21	73
	4224	GASKET	21–24	77–83
	4228	GASKET	21	75–77
	4229	COVER ASSEMBLY	21	75
	4231	SCREEN ASSEMBLY	21	75
	4232	COVER—OIL STRAINER	21	75
	4233	BODY ASSEMBLY	21	69
	4234	SUPPORT ASSEMBLY	25	87
	4235	IMPELLOR ASSEMBLY	25	87

	Part No.	Description	Figure	Page
	4236	GASKET	21–25	77–87
	4237	SEAL ASSEMBLY	21–25	77–87
	4238	PULLEY ASSEMBLY	25	87
	4239	HUB—FAN DRIVE PULLEY	21	71
	4240	PULLEY—FAN DRIVE	21	71
	4242	LEVER ASSEMBLY	21–26	69–89
	4243	PLATE WEIGHT GOVERNOR	21	69
	4244	ELEMENT—OIL FILTER	21	75
	4245	BEARING	21	71
	4245/2	BEARING .020″ UNDERSIZE	21	71
	4245/3	BEARING .030″ UNDERSIZE	21	71
	4245/4	BEARING .040″ UNDERSIZE	21	71
	4246	BEARING	21	71
	4246/2	BEARING .020″ UNDERSIZE	21	71
	4246/3	BEARING .030″ UNDERSIZE	21	71
	4246/4	BEARING .040″ UNDERSIZE	21	71
	4247	BEARING	21	73
	4247/2	BEARING .020″ UNDERSIZE	21	73
	4247/3	BEARING .030″	21	73
	4247/4	BEARING .040″	21	73
	4251	OIL PUMP ASSEMBLY	21	73
	4252	BODY ASSEMBLY	21	73
	4254	ROD—CHOKE CONTROL	25	89
N.S.	4255	ROD	25	89
	4256	SHAFT & PINION—STEERING	16	49
	4257	PLUNGER—HYD. LIFT	2	7
	4258	YOKE—HYD. LIFT	2	7
	4260	COVER	28–43	95–155
	4262	CLAMP	28–43	95–155
	4266	STOP—CLUTCH PEDAL	12	35
	4267	THROTTLE BODY ASSY.	27	91
	4268	SHIM .028″	14	41
	4269	ARM L.H.	12	35
	4270	ARM R.H.	12	35
	4274	BODY & FILTER ELEMENT	28	95
	4275	FILTER, ELEMENT BODY & DECAL.	43	155
	4276	BODY & FILTER ELEMENT	28	95
	4277	COVER—FILTER	28–43	95–155
	4279	FILTER, ELEMENT, BODY & DECAL.	43	155
	4280	CONTAINER—OIL	28–43	95–155
	4281	CONTAINER—OIL	28–43	95–155
	4295	THERMOSTAT	30	107
N.S.	4296	GEAR—DRIVEN	9	25
N.S.	4297	SHAFT	6	19
N.S.	4298	GEAR—SHAFT	9	25
	4300	BEARING ASSY.—INNER	32	117
	4301	BEARING ASSY.—OUTER	32	117
	4305	CROSS SHAFT	12	35
	4306	RING—PISTON	21–22	67–79
	4307	RING—PISTON	21–22	67–79
	4308	RING—PISTON	21–22	67–79
	4309	MAT—BATTERY	29	101
	4315	GUN—GREASE	29	101
	4327	BUSHING—VALVE	4	13
	4351	PEDAL ASSY.—BRAKE R.H.	12	35
	4352	PEDAL ASSY.—BRAKE L.H.	12	35
	5520	WIRE—H.T.	29	97
	7001	FORK ASSY.—HYD. LIFT	3	11
N.S.	7003	FORK—BOTTOM	3	11
N.S.	7004	FORK—TOP	3	11
	7007	ARM—HYD. LIFT	3	11
	7008	SHAFT—HYD. LIFT	3	11
	7009	SHAFT ASSEMBLY—P.T.O.	7	21
N.S.	7011	STAY—DRAW BAR ASSY. R.H.	5	17
N.S.	7012	STAY—DRAW BAR ASSY. L.H.	5	17
	7015	THRUST BLOCK—DRIVING GEAR	13	39
N.S.	7019	CROWN WHEEL	15	45
N.S.	7022	PINION	15	45
	7026	ARM—RAM	3	11
N.S.	7027	GEAR	18	57
N.S.	7028	GEAR	18	57
	7029	GEAR	18	57
N.S.	7030	GEAR	18	59
	7031	GEAR	18	59
N.S.	7037	COUNTERSHAFT	18	59
	7042	GASKET—HYD. LIFT	13	39
	7043	SUPPORT—P.T.O.	8	23
	7044	GEAR	18	57

NOTE : N.S. indicates—NOT SERVICED. Part number appears in this book for reference only

	Part No.	Description	Figure	Page
	7045	RETAINER	2	7
	7046	DRAWBAR	5	17
	7047	LINK & BALL ASSEMBLY	5	17
N.S.	7049	HUB	32	115
	7050	LINK ASSEMBLY R.H.	31	109
	7051	LINK ASSEMBLY L.H.	31	113
	7055	RADIUS ROD ASSEMBLY	31	111
	7057	PULLEY ASSEMBLY P.T.O.	9	25
	7058	FRONT & REAR DRIVER ATTACH. P.T.O.	7	21
	7059	UPPER CASTING —SEDIMENT BOWL	28	95
	7062	SPRING—DRIVERS SEAT	1	5
	7063	COVER—SHIFTER P.T.O.	8	23
	7065	UPPER LINK ASSEMBLY	5	17
	7070	GASKET	13	39
	7071	RETAINER	18–19	59–61
	7081	CUP—GEAR SHIFTER LEVER	17	55
	7083	GASKET	16–19	51–61
	7084	GEAR—SHIFT LEVER ASSY.	17	53
	7085	SHIFTER FORK	17	53
	7091	STAY—DRAWBAR—UPPER	5	17
	7092	STAY—DRAWBAR—LOWER	5	17
	7093	BRACKET—SUPPORT DASH	16–30	49–105
	7094	FRAME—TOP	29	97
	7097	PEDAL—COMBINED BRAKE	12	35
	7098	COVER PLATE	19	63
	7099	ELBOW—WATER OUTLET	24	83
	7101	PIPE—AIR CLEANER TO CARB.	28	95
	7102	HOSE—BOTTOM	30	107
	7104	BULKHEAD	30	103
	7106	TUBE ASSEMBLY	16	51
	7108	HOOD—SUPPORT	30	105
	7110	FUEL VALVE & SEDIMENT BOWL ASSEMBLY	28	95
	7113	CROWN WHEEL & PINION ASSEMBLY	15	47
	7114	DIFF. CASE ASSEMBLY—R. & L.H.	15	45
	7116	GASKET—STEERING HOUSING	16	51
	7117	HUB ASSEMBLY	32	115
	7118	BRAKE SHOE & LINING	11	33
	7120	COUNTERSHAFT ASSEMBLY	18	59
	7121	GEAR	18	57
	7122	GEAR	18	57
	7123	GEAR	18	59
	7126	HOSE	30	107
	7133	GEAR—DIFF.	15	45
	7134	GASKET	21	69–77
	7135	GASKET	21	67–77
N.S.	7136	PISTON	21–22	67–79
	7138	BEARING CAP—GEAR	21	73
	7139	FLYWHEEL ASSEMBLY	21	73
	7140	SHAFT—ROCKER ARM	24	83
N.S.	7141	BODY—OIL PUMP	21	73
	7142	GASKET	21	75–77
	7143	WATER PUMP—WORKS ASSEMBLY	25	87
	7144	GASKET	21–24	77–85
	7145	CARBURETTOR	27	91
	7148	WATER PUMP ASSEMBLY	25	87
	7149	BODY ASSEMBLY	25	87
N.S.	7150	BODY—WATER PUMP	25	87
	7152	TUBE ASSEMBLY—OIL PRESSURE GAUGE	16	51
	7154	PEDAL—CLUTCH	12	37
	7156	AIR CLEANER ASSEMBLY	43	155
	7158	AIR CLEANER ASSEMBLY	28	95
	7159	SLEEVE & PISTON ASSY.	21–22	67–79
	7161	AIR CLEANER ASSEMBLY	28	95
	7162	ARM R.H.	16	51
	7163	ARM L.H.	16	49
	7165	SECTOR—STEERING GEAR	16	51
	7166	SECTOR—STEERING GEAR	16	51
	7168	AIR CLEANER ASSEMBLY	43	155
	7170	PISTON SET	22	79
	7177	PLATE—STEERING HOUSING LOWER	16	51
N.S.	7186	HUB	32	115
	7187	CYLINDER	3	11

	Part No.	Description	Figure	Page
	7188	FRONT HUB ASSEMBLY	11–32	33–115
	7191	LINK ASSEMBLY—L.H.	31	113
	7192	LINK ASSEMBLY—R.H.	31	109
	7213	THROTTLE CONTROL ASSY.	16, 26	49, 88
	8501	LOWER LINK ASSY. R.H.	5	17
	8502	LOWER LINK ASSY. L.H.	5	17
N.S.	8505	BASE—HYD. PUMP	4	13
	8506	AXLE—CENTRE FRONT	31	111
	8507	HYDRAULIC PUMP ASSY.	4	13
	8508	COVER—HYD. LIFT	2	7
	8509	QUADRANT ASSY.	2	7
N.S.	8510	CASE DIFF. L.H.	15	45
	8512	FRONT AXLE ASSY. R.H.	31–32	111–115
	8513	FRONT AXLE ASSY. L.H.	31–32	113–115
N.S.	8514	AXLE—FRONT R.H.	31–32	111–115
N.S.	8515	AXLE—FRONT L.H.	31–32	113–115
N.S.	8516	BEAM—FRONT AXLE	31	111
	8517	SPINDLE—FRONT AXLE R.H.	31–32	111–115
	8518	SPINDLE—FRONT AXLE L.H.	31–32	113–115
	8520	FENDER—ASSEMBLY	10	29
	8521	ROD—LEVELLING—HYD. LIFT	6	19
	8527	HOUSING—P.T.O.	9	25
	8528	WHEEL—FRONT	10	29
N.S.	8534	CASE DIFF. R.H.	15	45
	8535	WHEEL—STEERING	16	49
	8537	HOUSING—STEERING—UPPER	16	49
	8539	MUFFLER & OUTLET PIPE	33	118
	8540	PIPE—EXHAUST—INLET.	33	118
	8542	SHIFTER FORK	17–18	53–57
	8543	SHIFTER FORK	17	53
N.S.	8544	SHAFT	7	21
	8549	TOOL BOX	29	101
	8550	DRUM—BRAKE	14	41
N.S.	8551	CLUTCH ASSEMBLY	20	65
	8552	FAN ASSEMBLY	25	87
	8553	BELT—FAN	25	87
	8555	COWL—RADIATOR	30	107
	8559	SUPPORT ASSEMBLY	31	111
	8561	SHIELD ASSEMBLY	33	118
	8565	PLATFORM—BATTERY	29	97
	8566	HOOD STIFFENER STRAP ASSEMBLY	30	105
	8570	COVER—CLUTCH	20	65
	8572	PLATE—CLUTCH DRIVEN	19–20	61–65
N.S.	8573	STRAP—STIFFENING	30	105
N.S.	8574	QUADRANT & LEVER ASSY.	2	7
	8576	DIFF. CASES, GEARS & PINIONS ETC.	15	45
	8578	BACK PLATE L.H.	11	31
	8579	BACK PLATE R.H.	11	31
	8584	PIPE—MUFFLER TO MANIFOLD	33	108
	8588	PIPE—OIL CLEANER	43	155
N.S.	8590	COVER—GEAR	21	67
N.S.	8591	ROD & CAP	21–22	77–79
	8592	CAMSHAFT	21	71
	8593	CRANKSHAFT	21	73
	8595	COVER ASSEMBLY	21–24	77–83
	8596	OIL PAN ASSEMBLY	21	75
	8598	MANIFOLD	24	85
	8599	ROD—CONNECTING ASSEMBLY	21–22	77–79
	8600	COVER ASSEMBLY	21	67
	8607	GASKET	19	63
	8610	PIPE ASSEMBLY	43	155
N.S.	8613	HOUSING	16	51
	8617	SUPPORT ASSEMBLY	31	111
	8623	SHAFT ASSY.—REAR AXLE	14	41
	8624	COVER ASSEMBLY	19–20	61–65
	8628	BELT—FAN	39	143
	8630	WHEEL FRONT—SCALLOPED CENTRE	10	29
	8644	SPINDLE — FRONT AXLE — R.H.	31–32	111–115
	8645	SPINDLE — FRONT AXLE — L.H.	31–32	113–115
	9501	HYDRAULIC LIFT ASSY.	2	7
	9507	HOOD—TOP PANEL	30	103
	9509	ENGINE ASSEMBLY	21	67
	9512	HOUSING ASSEMBLY L.H.	14	41
N.S.	9513	HOUSING L.H.	14	41

NOTE : N.S. indicates—NOT SERVICED. Part number appears in this book for reference only.

	Part No.	Description	Figure	Page
	9514	HOUSING ASSEMBLY R.H.	14	41
N.S.	9515	HOUSING R.H.	14	41
	9516	CENTRE HOUSING ASSY.	13	39
	9523	GRILLE ASSEMBLY L.H.	30	103
	9524	GRILLE ASSEMBLY R.H.	30	103
	9525	BRAKE ASSEMBLY L.H.	11	31
	9526	BRAKE ASSEMBLY R.H.	11	31
	9531	PANEL ASSEMBLY L.H.	30	103
	9532	PANEL ASSEMBLY R.H.	30	103
	9533	LOWER PANEL & CENTRE BAR ASSEMBLY	30	103
	9536	DRIVERS SEAT ASSEMBLY	1	5
N.S.	9543	BRACKET L.H.	30	103
N.S.	9544	BRACKET R.H.	30	103
N.S.	9545	BRACKET L.H.	30	103
N.S.	9546	BRACKET R.H.	30	103
N.S.	9547	LOUVRE	30	103
N.S.	9548	LOUVRE	30	103
	9552	RIM—REAR WHEEL	10	29
	9553	DISC—REAR WHEEL	10	29
	9554	DISC—REAR WHEEL—PLAIN	10	29
N.S.	9559	TRANS. CASE	19	61
N.S.	9575	HEAD—CYLINDER	24	85
	9576	CYLINDER & CRANKCASE ASSEMBLY	21	67
	9577	CYLINDER HEAD ASSEMBLY	24	85
	9578	CYLINDER HEAD ASSEMBLY (WITH VALVES)	24	85
	9582	COWL	30	107
	9583	RADIATOR	30	107
	9589	RADIATOR	30	107
	9592	PETROL PIPE ASSEMBLY	28	95
	9593	PETROL PIPE ASSEMBLY	28	95
	9594	PETROL PIPE ASSEMBLY	43	155
	9623	FUEL TANK ASSEMBLY	30	105
	27378	PLUG—CORE	38	141
	27670	SHIM—STARTER JAW	35	125
	30123	PACKING	40–41	145–147
	32307	WASHER—FELT	35	127
	35249	SPRING—ANTIRATTLE	20	65
	35253	NUT—CLUTCH EYE BOLT	20	65
	37417	WASHER	38	137
	38054	LOCKNUT	40–41	145–147
	41325	BOLT—EYE	20	65
	41326	STRUT	20	65
	42537	PIN	20	65
	42880	SCREW—LOCKING	38	141
	44370	BUSH—ROCKER	38	141
	44473	PLUG—CORE	34	121
	44630	SPRING—ROCKER	38	139
	45918	WASHER—THRUST—TOP	34	123
	45919	WASHER—THRUST—BOTTOM	34	121
	45985	CIRCLIP	36	129
	46032	PLATE—CLUTCH PRESSURE	20	65
	46172	PLUG—CORE	35	127
	48648	SPRING—CLUTCH THRUST	20	65
	49314	PLATE	40	145
	49315	"C" SPRING	40–41	145–147
	49316	WASHER—FELT	41	147
	49320	WASHER	40	145
	49321	PLATE	40	145
	49322	WASHER	40	145
	49323	"C" SPRING	40	145
	49325	WASHER	40–41	145–147
	49326	WASHER	40–41	145–147
	51681	LEVER	20	65
	52337	WASHER	38	141
	55544	CRANKSHAFT	34	123
N.S.	55675S	CAP—CENTRE BEARING	34	121
N.S.	55676S	CAP—FRONT BEARING	34	121
N.S.	55677S	CAP—REAR BEARING	34	121
	55810	SEALING BLOCK—FRONT	37	133
	55822	PEDESTAL—DRILLED	38	139
	55823	PEDESTAL—PLAIN	38	139
	55873	SPRING	38	139
	55876	GUIDE—INLET VALVE	38	141
	55877	GUIDE—EXHAUST VALVE	38	141
	55878	TUBE	38	141
	55941	STUD	38	139
	55942	STUD	35	125
	55943	WASHER	38	139

	Part No.	Description	Figure	Page
	55945	STUD	38	137
	55950	COVER ASSEMBLY—ROCKER	38	139
N.S.	55951	ROD—CONNECTING	36	129
	55970	WHEEL—CAMSHAFT CHAIN	33	127
	55971	WHEEL — CRANKSHAFT CHAIN	35	127
	56182	BODY	39	143
	56203	LINER	36	129
	56211	TAB WASHER	36	129
	56212	BOLT	36	129
	56214	GASKET	39	143
	56216	CAMSHAFT	35	127
	56222	RETAINER	39	143
	56223	BEARING—BALL	39	143
	56237	GASKET	39	143
	56243	STUD	39	143
	56251	BUSH	36	129
	56282	WASHER	37	133
	56285	GASKET	36	129
	56287	GEAR—FLYWHEEL RING	34	121
	56289	COVER—TIMING	35	127
	56290	JOINT—TIMING COVER	35	127
	56293	PLATE—LOCK	35	125
	56294	SCREW	35	127
	56295	SPRING	35	127
	56296	SEAL—DUST & OIL	35	125
	56306	BEARING—NEEDLE ROLLER	35	125
	56307	SHAFT—GOVERNOR	35	125
	56311	PLATE	35	127
	56313	WEIGHT ASSEMBLY	35	125
	56315	PIN—FULCRUM	35	125
	56319	CUP AND SHAFT ASSEMBLY	35	125
	56330	PULLEY—CRANKSHAFT	35	125
	56342	BEARING–MAIN–STANDARD	34	121
	56342/2	BEARING–MAIN–STANDARD .020" UNDERSIZE	34	121
	56342/3	BEARING–MAIN–STANDARD .030" UNDERSIZE	34	121
	56342/4	BEARING–MAIN–STANDARD .040" UNDERSIZE	34	121
	56350	JOINT—OIL FILTER COVER	37	133
	56351	OIL FILTER	37	133
	56370	SCREW—SET	35	127
	56384	SCREW—SET	35	127
	56386	WASHER—OIL SUMP	37	133
	56388	PLATE—FRONT ENGINE	35	127
	56389	WASHER	35	127
	56391	SEAL—OIL	35	127
	56392	PLATE	35	127
	56393	JAW—STARTER	35	125
	56403	GEAR—DRIVING	37	135
	56404	DRIVE SHAFT—OIL PUMP	37	135
	56405	BUSH	37	135
	56406	ADAPTOR—DISTRIBUTOR	37	131
	56407	WASHER	37	131
	56417	BRACKET ASSY.—DYNAMO	34	123
	56418	DISTANCE PIECE	34	123
	56420	WASHER	37	131
	56434	SPRING—ROCKER	38	137
	56513	HUB	39	143
	56521	RETAINER—OIL SEAL	34	121
	56522	SHIM .004	35	127
	56523	SHIM .006	35	127
	56524	PLATE—LOCATING	34	121
	56526	SCREW—SET	34	121
	56538	SEAL ASSEMBLY	39	143
	56541	FAN ASSEMBLY	39	143
	56551	VALVE—INLET	38	139
	56561	STUD	38	137
	56574	SCREW	37	133
	56575	WASHER—TAB	35	125
	56583	DIPSTICK ASSEMBLY	35	127
	56664	SCREW—UNION	35	127
	56668	SPRING—VALVE	38	139
	56675	NUT	33–38	119–137
	56724	ARM—GOVERNOR ROCKER	35	125
	56765	PLUG—CORE	34	121
	56823	GASKET—CYLINDER HEAD	35	125
	56837	PULLEY—DYNAMO	29	97
	57021	PULLEY ASSEMBLY	39	143
	57030	BODY—THERMOSTAT	38	137

NOTE: N.S. indicates—NOT SERVICED. Part number appears in this book for reference only.

Part No.	Description	Figure	Page
57042	ELBOW—WATER OUTLET	38	137
57071	WASHER	38	137
57073	CONNECTION	38	137
57088	LEVER ASSEMBLY	26–35	89–125
57102	THERMOSTAT UNIT	38	137
57103	GASKET	38	137
57109	PIN	38	139
57110	LOCKNUT	38	139
57121	SCREW—SET	34	121
57130	SCREW TAPER SET	35	125
57151	CHAIN—DUPLEX	35	125
57196	DEFLECTOR—OIL	35	127
57203	WASHER	37	131
57313	OIL PUMP ASSEMBLY	37	133
57314	SPINDLE ASSY.—OIL PUMP	37	133
57317	ROTOR—OUTER	37	133
57319	BODY—OIL PUMP	37	133
57320	COVER ASSEMBLY	37	133
57341	MANIFOLD	38	137
57658	SCREW—UNION	34	123
57736	PISTON ASSEMBLY	36	129
57765	OIL FILTER—VERTICAL	37, 41	131-147
57766	ELEMENT—OIL FILTER	41	147
57767	WASHER	37	131
57889	VALVE ASSEMBLY	38	137
57894	SCREW—LOCATING	35	125
57919	SEAL—REAR OIL	34	121
57933	TAPPET—VALVE	38	139
57963	ENGINE UNIT ASSEMBLY	34	121
57964	CYLINDER BLOCK ASSEMBLY	34	121
57967	HEAD—CYLINDER ASSEMBLY	37	137
58061	ROD—TIE	25	89
58062	END—FORK	25	89
58077	PIN—CLEVIS	25	89
58081	SHAFT—ROCKER	38	139
58122	BODY—OIL FILLER	37	131
58123	CAP ASSEMBLY OIL FILLER	37	131
58133	TAP—DRAIN	34	123
58141	PISTON ASSEMBLY	36	129
58141/2	PISTON ASSY. .020" OVERSIZE	36	129
58141/3	PISTON ASSY. .030" OVERSIZE	36	129
58141/4	PISTON ASSY. .040" OVERSIZE	36	129
58142	CRANKSHAFT	34	123
58182	SCREW—UNION	38	139
58189	TUBE ASSEMBLY	38	137
58191	CARBURETTOR ASSEMBLY	42	151
58294	PLUG DRAIN	37	133
58297	WASHER	38	137
58334	PIN—MILLS	35–38	127–139
58335	FELT	34	121
58393	ROD—CONNECTING	36	129
58517	BARREL	42	151
58518	THROTTLE	42	151
58519	SPINDLE	42	151
58520	SCREW	42	151
58521	STOP	42	151
58522	LEVER	42	151
58523	WASHER—SPACING	42	151
58524	SCREW	42	151
58525	SPRING	42	151
58526	SCREW—AIR REGULATOR	42	153
58527	SPRING — AIR REGULATOR SCREW	42	153
58528	NEEDLE AND SEATING	42	153
58529	WASHER	42	153
58530	FLOAT	42	153
58531	TUBE—CHOKE 17 m/m.	42	153
58532	GASKET	42	153
58533	SCREW	42	151
58534	STRANGLER WITH SWIVEL	42	153
58535	SPRING	42	153
58536	BEARING	42	153
58537	BOWL	42	151
58538	SPINDLE AND PIN	42	151
58539	FLAP—STRANGLER	42	151
58540	SLEEVE—SPINDLE	42	151
58541	SPRING	42	151
58542	PLATE	42	151
58543	TUBE	42	151
58544	ROD	42	153
58545	SCREW	42	153

Part No.	Description	Figure	Page
58546	MAIN JET	42	153
58547	WASHER	42	153
58548	VALVE—NEEDLE	42	153
58549	PACKING	42	153
58550	NUT—PACKING	42	153
58636	VALVE—EXHAUST	38	139
58702	COLLAR—VALVE SPRING	38	139
58703	CONE—SPLIT	38	139
58704	CAGE FOR WASHER	38	139
58705	WASHER—SEALING	38	139
58865	HOUSING—BEARING	39	143
58931	WATER PUMP ASSEMBLY	39	143
59000	ROCKER ASSEMBLY NO. 1	38	139
59001	ROCKER ASSEMBLY NO. 2	38	139
59323	OIL SUMP	37	133
59381	SEALING PAD	37	133
59383	OIL FILTER ASSEMBLY	36–37–40	129–131–145
59384	ELEMENT—OIL FILTER	40	145
59387	DRIVE SHAFT—OIL PUMP	37	135
59389	GEAR ASSEMBLY—DRIVING	37	135
59551	MAIN JET—ADJ. ASSEMBLY	42	153
59552	WASHER	42	153
59553	TUBE—SLOW RUNNING	42	151
59554	JET—AIR	42	153
59555	PLUG—DRAIN VALVE	42	153
59559	HEAD—FILTER	41	147
59600	BOLT	41	147
59601	SPRING	41	147
59602	WASHER	41	147
59603	CONTAINER	41	147
59604	WASHER	41	149
59605	WASHER	41	147
59606	FILTER BASE	41	147
59607	WASHER	41	147
59608	WASHER	40–41	145–147
59610	SPRING	41	149
59611	WASHER	41	147
59612	PLATE—PRESSURE	41	147
59613	PLUG	41	149
59615	BODY	40–41	145–147
59616	WASHER	41	149
59617	VALVE	41	149
59621	FACINGS AND RIVETS—SET	20	65
59628	WASHER—SPRING	42	151
59629	ADAPTOR	42	153
59733	HEAD—FILTER	40	145
59734	BOLT	40	145
59735	SPRING	40	145
59736	CONTAINER ASSEMBLY	40	145
59737	WASHER	40	145
59738	WASHER—FELT	40	145
59739	WASHER	40	145
59740	WASHER	40	145
59741	VALVE ASSEMBLY	40	145
59833	ENGINE ASSEMBLY	34	121
59834	HEAD—CYLINDER ASSEMBLY	38	137
59836	TUBE—CHOKE 18 m/m.	42	153
59867	NUT	39	143
59869	BOLT	39	143
59870	STUD	37	131
59871	STUD	37	131
59872	STUD	37	131
59873	STUD	38	137
59874	STUD	39	131
59875	STUD	35	125
59876	STUD	34	121
59877	PLUG—CORE	38	141
59878	WASHER—FIBRE	34	123
59879	WASHER—FIBRE	35	127
59880	WASHER—FIBRE	37	131
59881	WASHER—FIBRE	34	123
59882	WASHER—FIBRE	34	123
59883	WASHER—FIBRE	37	133
59884	WASHER—FIBRE	38	139
59885	WASHER—FIBRE	38	139
59886	WASHER—FIBRE	38	141
59888	WASHER	35	125
59889	KEY—WOODRUFF	37	135
59890	SLEEVE—TUBING	38	137
59891	NUT	42	151

NOTE: N.S. indicates—NOT SERVICED. Part number appears in this book for reference only.

MODEL TE20 & TEA20 TRACTOR PARTS NUMERICAL INDEX

	Part No.	Description	Figure	Page
	59892	BALL	40–41	145–147
	59893	DOWEL	34	121
	59894	DOWEL	35	125
	59895	DOWEL	34	121
	59896	CLIP—PIPE	38	137
	60070	BUSH	36	129
	60079	BOLT	36	129
N.S.	60094	ROD—CONNECTING	36	129
N.S.	60127	PIST N	36	129
	60128	RING—COMPRESSION	36	129
	60128/1	RING— ,, .010 O/SIZE..	36	129
	60128/2	RING— ,, .020 O/SIZE..	36	129
	60128/3	RING— ,, .030 O/SIZE..	36	129
	60128/4	RING— ,, .040 O/SIZE..	36	129
	60129	RING—SCRAPER	36	129
	60129/1	RING—SCRAPER .010 O/SIZE.	36	129
	60129/2	RING—SCRAPER .020 O/SIZE.	36	129
	60129/3	RING—SCRAPER .030 O/SIZE	36	129
	60129/4	RING—SCRAPER .040 O/SIZE.	36	129
	60130	PIN—GUDGEON	36	129
	60133	RING—SCRAPER—SLOTTED	36	129
	60133/1	RING—SCRAPER—SLOTTED .010 O/SIZE.	36	129
	60133/2	RING—SCRAPER—SLOTTED .020 O/SIZE.	36	129
	60133/3	RING—SCRAPER—SLOTTED .030 O/SIZE.	36	129
	60133/4	RING—SCRAPER—SLOTTED .040 O/SIZE.	36	129
N.S.	60134	PISTON	36	129
	60219	FLYWHEEL ASSEMBLY	34	121
	60313	SEAL	39	143
	60314	COVER	29	99
	60379	COVER	29	97
	60414	SPRING	40–41	145–147
	60416	PLUG—ADJ.	40–41	145–147
	60537	HOUSING & BEARING ASSY..	39	143
	60561	WASHER	29	97
	60575	IMPELLOR	39	143
	60664	WASHER—PACKING	29	99
	60733	COLLAR	38	139
	60841	BEARING	36	129
	60841/2	BEARING .020 UNDERSIZE	36	129
	60841/3	BEARING .030 UNDERSIZE	36	129
	60841/4	BEARING .040 UNDERSIZE	36	129
	61049	STUD	37	133
	61128	ROD—VALVE PUSH	38	139

STANDARD PARTS NUMERICAL INDEX

Part No.	Description	Page
25 CBH 44	BOLT—HEX.	9
25 CBH 50	,, ,,	121
25 CBH 62	,, ,,	69, 99
25 CBH 75	,, ,,	133
25 CBH 87	,, ,,	99, 105
25 CBH 100	,, ,,	118
25 FBH 38	,, ,,	127
25 FBH 87	,, ,,	105
25 FBH 138 TD	,, ,,	39
31 CBH 38	,, ,,	7
31 CBH 50	,, ,,	61, 99, 103
31 CBH 56	,, ,,	133
31 CBH 62	,, ,,	83, 105
31 CBH 75	,, ,,	123, 127, 131
31 CBH 88	,, ,,	61, 99, 137
31 CBH 100	,, ,,	89, 118
31 CBH 106	,, ,,	131
31 CBH 125	,, ,,	133
31 CBH 162	,, ,,	118
31 CBH 188	,, ,,	35
31 FBH 212	,, ,,	125
31 CBH 238	,, ,,	119, 125
31 CBH 294	,, ,,	131
31 CBH 312	,, ,,	131
31 CBH 400	,, ,,	131
31 CBH 438	,, ,,	131
31 CBH 512	,, ,,	133
31 CBH 544	,, ,,	133
31 FBH 62	,, ,,	83, 105
31 FBH 68	,, ,,	143
31 FBH 125	,, ,,	109
31 FBH 138	,, ,,	143
31 FBH 150	,, ,,	109
38 CBH 38	,, ,,	141
38 CBH 100	,, ,,	39, 83
38 CBH 112	,, ,,	69
38 CBH 125	,, ,,	57
38 CBH 228	,, ,,	143
38 CBH 265	,, ,,	143
38 FBH 100	,, ,,	23
44 CBH 50	,, ,,	131
44 CBH 75	,, ,,	23, 39, 69, 99
44 CBH 88	,, ,,	55, 69
44 CBH 94	,, ,,	7, 97

Part No.	DESCRIPTION	Page
44 CBH 100	BOLT—HEX.	101
44 CBH 112	,, ,,	21, 27, 39, 61, 63, 69
44 CBH 138	,, ,,	15, 19, 49, 63. 69
44 CBH 150	,, ,,	13, 39, 69
44 CBH 162	,, ,,	51
44 CBH 188	,, ,,	51
44 CBH 200	,, ,,	35, 51
44 CBH 206	,, ,,	35, 51
44 CBH 225	,, ,,	35, 51
44 CBH 250	,, ,,	35, 37, 39
44 CBH 362	,, ,,	39
44 CBH 368	,, ,,	97
44 FBH 68	,, ,,	11, 97
44 FBH 88	,, ,,	25
44 FBH 112	,, ,,	17, 107
44 FBH 138	,, ,,	39, 63
44 FBH 144	,, ,,	123
44 FBH 162	,, ,,	15, 113
44 FBH 182 TD	,, ,,	53
44 FBH 212	,, ,,	113
44 FBH 212 TD	,, ,,	53
44 FBH 262	,, ,,	111, 113, 115
44 FBH 456	,, ,,	123
50 FBH 112	,, ,,	111
56 CBH 125	,, ,,	45
62 FBH 200	,, ,,	113
62 FBH 300	,, ,,	111
62 FBH 312	,, ,,	113
62 FBH 531	,, ,,	111
62 FBH 556	,, ,,	29
16 FSR 62	ROUND HEAD SCREW	105
19 FSR 50	,, ,, ,,	155
25 CSR 62	,, ,, ,,	118
25 FSR 175 TD	,, ,, ,,	37, 61
31 FBR 62	RIBBED NECK SCREW	49
31 FBR 68	,, ,, ,,	49
31 FBR 81	,, ,, ,,	49
44 FBS 332	SQUARE HEAD BOLT	11
44 FBS 500	,, ,, ,,	11
25 CNH	NUT.—HEX.	67, 99, 105, 118, 127
25 CNHJ	,, ,, —JAM	49, 88, 89
25 FNH	,, ,,	89, 105, 131
25 FNT	,, ,, —SLOTTED	37, 39, 61
31 CNH	,, ,,	35, 89, 91, 103, 118, 119

NOTE : N.S. indicates—NOT SERVICED. Part number appears in this book for reference only.

STANDARD PARTS NUMERICAL INDEX

Part No.	DESCRIPTION	Page
31 FNH	NUT—HEX.	49, 61, 89, 99, 109, 125, 131, 133, 137, 139, 143
31 FNHJ	,, ,, —JAM	81
31 FNT	,, ,, —SLOTTED	103, 105
38 CNHJ	,, ,, —JAM	37
38 FNH	,, ,,	23, 57, 139, 143
44 CNH	,, ,,	35, 37, 51, 97, 99, 107
44 FNH	,, ,,	5, 17, 19, 39, 41, 43, 55, 63, 69, 107, 111, 113, 115, 123
44 FNT	,, ,, —SLOTTED	7, 53
50 FNHJ	,, ,, —JAM	109, 113
62 FNH	,, ,,	29, 111, 113
62 FNHJ	,, ,, —JAM	63
75 FNHJ	,, ,, ,,	51
19 FNX	,, ,,	89, 155
16 WL	WASHER—LOCK	103, 105
19 WL	,, ,,	143, 155
25 WL	,, ,,	9, 49, 67, 69, 88, 99, 105, 118, 121, 125, 127, 131, 133
31 WL	,, ,,	49, 59, 61, 83, 89, 103, 105, 109, 118, 123, 125, 127, 131, 133, 137, 143,
38 WL	,, ,,	23, 39, 57, 69, 83, 87, 119, 137, 139, 143 ,
44 WL	,, ,,	5, 19, 25, 27, 37, 41, 49 51, 55, 63, 69, 73, 97 99, 101, 107, 111, 113 115, 123
50 WL	,, ,,	111, 121
56 WL	,, ,,	45
62 WL	,, ,,	29, 113
16 WF	WASHER—FLAT	103, 105
25 WF	,, ,,	9, 69, 89. 97, 99
31 WF	,, ,,	35, 61, 83, 99, 103. 105, 119, 133, 139
31 WFH	,, ,,—HEAVY	105
38 WF	,, ,,	137

Part No.	Description	Page
38 WFH	WASHER–FLAT–HEAVY	88
44 WF	,, ,,	7, 17, 19, 35, 37, 53, 61, 63, 69, 97, 123
44 WFH	,, ,,—HEAVY	7, 107
50 WF	,, ,,	109, 113
62 WF	,, ,,	41
62 WFH	,, ,,—HEAVY	17, 25, 29, 111
06 PC 38	PIN—COTTER	89
06 PC 50	,, ,,	11, 89, 103, 125
06 PC 62	,, ,,	37, 39, 61, 71, 88,
06 PC 75	,, ,,	31, 89
06 PC 87	,, ,,	105
09 PC 50	,, ,,	11, 35, 99, 105
09 PC 62	,, ,,	11, 19, 88, 89
09 PC 75	,, ,,	37, 55, 89
09 PC 88	,, ,,	53
09 PC 138	,, ,,	25
12 PC 75	,, ,,	11, 89
12 PC 88	,, ,,	7
12 PC 100	,, ,,	17, 19, 41, 105
12 PC 125	,, ,,	75
16 PC 125	,, ,,	17, 111, 117
25 PS 68	,, —CLEVIS	89
25 PS 81	,, ,,	11
25 PS 88	,, ,,	11
31 PS 50	,, ,,	99
31 PS 88	,, ,,	99
31 PS 106	,, ,,	19, 35
31 PS 131	,, ,,	99
31 PS 212	,, ,,	11
38 PS 131	,, ,,	11
75 PS 290	,, ,,	17
12 RB 38	RIVET—ROUND HEAD	127
12 RB 44	,, ,, ,,	67
12 RB 89	,, ,, ,,	53
19 RB 93	,, ,, ,,	17
25 RB 125	,, ,, ,,	23
19 RC 94	RIVET—COUNTERSUNK HEAD	19
12 PLF	LUBRICATOR	111, 115
25 SLF	,,	19, 109, 113

ELECTRICAL DETAILS—NUMERICAL INDEX
SERVICED BY MESSRS. J. LUCAS

Part No.	Description	Figure	Page
22420B	DYNAMO	29	97
25519D	STARTER	29	99
31083	SWITCH—IGNITION	29	97
37053A	BOX—CONTROL	29	99
38029B	LIGHT—WARNING	29	101
40084H	DISTRIBUTOR	29	99
40146D	DISTRIBUTOR	29	99
45014A	COIL—IGNITION	29	99
76407B	SWITCH—STARTER	29	99
185015	WASHER—SPLIT	29	99
186111	SCREW	29	97
187081	CLIP–WARNING LIGHT CABLE	29	101
228469	PULLEY—DYNAMO	29	97
238576	RUBBER BOOT—STARTER & SWITCH	29	99
238742	PLUG—FIELD	29	97
238743	PLUG—POSITIVE	29	97
312305	KEY—IGNITION	29	97

Part No.	Description	Figure	Page
400174	SCREW DRIVER & POINT GAUGE (DIST)	29	99
410600	NUT—MOULDED	29	99
414965	COVER—COIL LEAD	29	101
810823	LEAD	29	97
856023	LEAD	29	97
858229	CLIP—DYNAMO & STARTER LEADS	29	99
941834	CLEAT—DISTRIBUTOR LEAD	29	97
972733	LEAD—POSITIVE	29	97
974361	HARNESS	29	101
974362	HARNESS—MAIN	29	97
974371	CABLE SET	29	101
974372	LEAD	29	99
974373	LEAD	29	97
999107	LEAD	29	99
4010370F	BATTERY	29	97
4188033	BOLT—BATTERY LUG	29	97
4188035	NUT—BATTERY LUG	29	97

MODIFICATION DATA SHEET

TRACTOR STEERING

7068 Steering Sector 4117 Shaft and Pinion 7072/3 Steering Arms

USED ON
TRACTOR NUMBERS **TE.1—TE.260** INCLUSIVE

7166 Steering Sector 4117 Shaft and Pinion 7162/3 Steering Arms

USED ON TRACTOR NUMBERS :—

TE.261 —TE.4098
TE.4102
TE.4103
TE.4106
TE.4108—TE.4111
TE.4115
TE.4117
TE.4119
TE.4120
TE.4122—TE.4124
TE.4126
TE.4128
TE.4129
TE.4132
TE.4134
TE.4135
TE.4138
TE.4140
TE.4143
TE.4144
TE.4148
TE.4153
TE.4154
TE.4156
TE.4161
TE.4163
TE.4167
TE.4168
TE.4171—TE.4176
TE.4178
TE.4180
TE.4195
TE.4196
TE.4211
TE.4219
TE.4224
TE.4227
TE.4234
TE.4235
TE.4244
TE.4245
TE.4247—TE.4258
TE.4260
TE.4262—TE.4329
TE.4340
TE.4353
TE.4372
TE.4373
TE.4376
TE.4379
TE.4386
TE.4388
TE.4389
TE.4391
TE.4394
TE.4400
TE.4402
TE.4404
TE.4412—TE.4414
TE.4419
TE.4421
TE.4436
TE.4441
TE.4445
TE.4446
TE.4456
TE.4460

TE.4466
TE.4479
TE.4484
TE.4493
TE.4494—TE.4500
TE.4508
TE.4509
TE.4525—TE.4539
TE.4541
TE.4546
TE.4549
TE.4550
TE.4561
TE.4568
TE.4570—TE.4573
TE.4580
TE.4589
TE.4590
TE.4610
TE.4618
TE.4631
TE.4648
TE.4651
TE.4654
TE.4656
TE.4663
TE.4664
TE.4669
TE.4670
TE.4672—TE.4674
TE.4676
TE.4683
TE.4686
TE.4691
TE.4693
TE.4698
TE.4701
TE.4702
TE.4718
TE.4723
TE.4725—TE.4727
TE.4744
TE.4746
TE.4748
TE.4749
TE.4751—TE.4759
TE.4762—TE.4764
TE.4767
TE.4770
TE.4771
TE.4776
TE.4777
TE.4780—TE.4782
TE.4784—TE.4787
TE.4789—TE.4791
TE.4793—TE.4796
TE.4798—TE.4801
TE.4804—TE.4811
TE.4813
TE.4817
TE.4818
TE.4821
TE.4835
TE.4859
TE.4862
TE.4865
TE.4877

TE.4878
TE.4882—TE.4884
TE.4901
TE.4927
TE.4937
TE.4938
TE.4966
TE.4972
TE.4987
TE.5015
TE.5041
TE.5064
TE.5076
TE.5095
TE.5109
TE.5115
TE.5122
TE.5127
TE.5130
TE.5131
TE.5137
TE.5138
TE.5141
TE.5142
TE.5145
TE.5147
TE.5148
TE.5150
TE.5151
TE.5153
TE.5155
TE.5156
TE.5159
TE.5161
TE.5163
TE.5168
TE.5170
TE.5172
TE.5174
TE.5175
TE.5178
TE.5179
TE.5184
TE.5188
TE.5198
TE.5200
TE.5204
TE.5207
TE.5215
TE.5231
TE.5272
TE.5274
TE.5275
TE.5278
TE.5287
TE.5288
TE.5291—TE.5293
TE.5299
TE.5307
TE.5319—TE.5321
TE.5332
TE.5336
TE.5341
TE.5348
TE.5352
TE.5355
TE.5357

TE.5360
TE.5371
TE.5375
TE.5376
TE.5379—TE.5381
TE.5383
TE.5384
TE.5388
TE.5390
TE.5393
TE.5396
TE.5397
TE.5399
TE.5400
TE.5402
TE.5411
TE.5413
TE.5415
TE.5421
TE.5422
TE.5424
TE.5425
TE.5427
TE.5429
TE.5431—TE.5433
TE.5435—TE.5438
TE.5440
TE.5442
TE.5448
TE.5461—TE.5467
TE.5470
TE.5475
TE.5479
TE.5486
TE.5490
TE.5495
TE.5497
TE.5503
TE.5509
TE.5511
TE.5515
TE.5523
TE.5529
TE.5531
TE.5534
TE.5538
TE.5541
TE.5545
TE.5546
TE.5550
TE.5551
TE.5554
TE.5561
TE.5571
TE.5573
TE.5578
TE.5582
TE.5584
TE.5585
TE.5588
TE.5591
TE.5595
TE.5597
TE.5601—TE.5605
TE.5612
TE.5613
TE.5620

TE.5624
TE.5625
TE.5632
TE.5637
TE.5645
TE.5647
TE.5652
TE.5658
TE.5659
TE.5661
TE.5664
TE.5667
TE.5673
TE.5688
TE.5716
TE.5720
TE.5723
TE.5726
TE.5744
TE.5745
TE.5751
TE.5753
TE.5755
TE.5757
TE.5772
TE.5773
TE.5787
TE.5789
TE.5804
TE.5814
TE.5818
TE.5835
TE.5847
TE.5867
TE.5885
TE.5888
TE.5891
TE.5895
TE.5906
TE.5909
TE.5917
TE.5920
TE.5927
TE.5946
TE.5964
TE.5965
TE.5969
TE.5979
TE.5991
TE.5994
TE.6000
TE.6002
TE.6005
TE.6008
TE.6011
TE.6013—TE.6015
TE.6019
TE.6020
TE.6022
TE.6025
TE.6027—TE.6036
TE.6038—TE.6054
TE.6056—TE.6061
TE.6063—TE.6090
TE.6092—TE.6095
TE.6098
TE.6102—TE.6108

TRACTOR STEERING

Tractor Numbers *(continued)*

TE.6130
TE.6133
TE.6134
TE.6136
TE.6164
TE.6173
TE.6185
TE.6188
TE.6189
TE.6199
TE.6212
TE.6226
TE.6249
TE.6254
TE.6255
TE.6260
TE.6264

TE.6275—TE.6277
TE.6281
TE.6289
TE.6309
TE.6341
TE.6345
TE.6346
TE.6359
TE.6378
TE.6427
TE.6442
TE.6448
TE.6462
TE.6466
TE.6469
TE.6472
TE.6477

TE.6481
TE.6483
TE.6485
TE.6504
TE.6511
TE.6512
TE.6522
TE.6525
TE.6531
TE.6533
TE.6536
TE.6540
TE.6544
TE.6548
TE.6560
TE.6562
TE.6564

TE.6589
TE.6591
TE.6600—TE.6602
TE.6612
TE.6615
TE.6632
TE.6641
TE.6642
TE.6644
TE.6652
TE.6683
TE.6686
TE.6707
TE.6708
TE.6717
TE.6725
TE.6733

TE.6739
TE.6754
TE.6756
TE.6760
TE.6764
TE.6770
TE.6785
TE.6809
TE.6819
TE.6821
TE.6825
TE.6827
TE.6834
TE.6835
TE.6837
TE.6839
TE.6841—TE.6848

TRACTOR STEERING

7165 Steering Sector 4256 Shaft and Pinion 7162/3 Steering Arms

USED ON TRACTOR NUMBERS :—

TE.4099—TE.4101
TE.4104
TE.4105
TE.4107
TE.4112—TE.4114
TE.4116
TE.4118
TE.4121
TE.4125
TE.4127
TE.4130
TE.4131
TE.4133
TE.4136
TE.4137
TE.4139
TE.4141
TE.4142
TE.4145—TE.4147
TE.4149—TE.4152
TE.4155
TE.4157—TE.4160
TE.4162
TE.4164—TE.4166
TE.4169
TE.4170
TE.4177
TE.4179
TE.4181—TE.4194
TE.4197—TE.4210
TE.4212—TE.4218
TE.4220—TE.4223
TE.4225
TE.4226
TE.4228—TE.4233
TE.4236—TE.4243
TE.4246
TE.4259
TE.4261
TE.4330—TE.4339
TE.4341—TE.4352
TE.4354—TE.4371
TE.4374
TE.4375
TE.4377
TE.4378
TE.4380—TE.4385
TE.4387
TE.4390
TE.4392
TE.4393
TE.4395—TE.4399

TE.4401
TE.4403
TE.4405—TE.4411
TE.4415—TE.4418
TE.4420
TE.4422—TE.4435
TE.4437—TE.4440
TE.4442—TE.4444
TE.4447—TE.4455
TE.4457—TE.4459
TE.4461—TE.4465
TE.4467—TE.4478
TE.4480—TE.4483
TE.4485—TE.4492
TE.4494—TE.4498
TE.4501—TE.4507
TE.4510—TE.4524
TE.4540
TE.4542—TE.4545
TE.4547
TE.4548
TE.4551—TE.4560
TE.4562—TE.4567
TE.4569
TE.4574—TE.4576
TE.4581—TE.4588
TE.4591—TE.4609
TE.4611—TE.4617
TE.4619—TE.4630
TE.4632—TE.4647
TE.4649
TE.4650
TE.4652
TE.4653
TE.4655
TE.4657—TE.4662
TE.4665—TE.4668
TE.4671—TE.4675
TE.4677—TE.4682
TE.4684
TE.4685
TE.4687—TE.4690
TE.4692
TE.4694—TE.4697
TE.4699
TE.4700
TE.4703—TE.4717
TE.4719—TE.4722
TE.4724
TE.4728—TE.4743
TE.4745
TE.4747

TE.4750
TE.4760
TE.4761
TE.4765
TE.4766
TE.4768
TE.4769
TE.4772—TE.4775
TE.4778
TE.4779
TE.4783
TE.4788
TE.4792
TE.4797
TE.4802
TE.4803
TE.4812
TE.4814—TE.4816
TE.4819
TE.4820
TE.4822—TE.4834
TE.4836—TE.4858
TE.4860
TE.4861
TE.4863
TE.4864
TE.4866—TE.4876
TE.4879—TE.4881
TE.4885—TE.4900
TE.4902—TE.4926
TE.4928—TE.4936
TE.4939—TE.4965
TE.4967—TE.4971
TE.4973—TE.4986
TE.4988—TE.5014
TE.5016—TE.5040
TE.5042—TE.5063
TE.5065—TE.5075
TE.5077—TE.5094
TE.5096—TE.5108
TE.5110—TE.5114
TE.5116—TE.5121
TE.5123—TE.5126
TE.5128—TE.5129
TE.5132—TE.5136
TE.5139
TE.5140
TE.5143
TE.5144
TE.5146
TE.5149
TE.5152

TE.5154
TE.5157
TE.5158
TE.5160
TE.5162
TE.5164—TE.5167
TE.5169
TE.5171
TE.5173
TE.5176
TE.5177
TE.5180—TE.5183
TE.5185—TE.5187
TE.5189—TE.5197
TE.5199
TE.5201—TE.5203
TE.5205
TE.5206
TE.5208—TE.5214
TE.5216—TE.5230
TE.5232—TE.5271
TE.5273
TE.5276
TE.5277
TE.5279—TE.5286
TE.5289—TE.5290
TE.5294—TE.5298
TE.5300—TE.5306
TE.5308—TE.5318
TE.5322—TE.5331
TE.5333—TE.5335
TE.5337—TE.5340
TE.5342—TE.5347
TE.5349—TE.5351
TE.5353
TE.5354
TE.5356
TE.5358
TE.5359
TE.5361—TE.5370
TE.5372—TE.5374
TE.5377
TE.5378
TE.5382
TE.5385—TE.5387
TE.5389
TE.5391
TE.5392
TE.5394
TE.5395
TE.5398
TE.5401

TE.5403—TE.5410
TE.5412
TE.5414
TE.5416—TE.5420
TE.5423
TE.5426
TE.5428
TE.5430
TE.5434
TE.5439
TE.5441
TE.5443—TE.5447
TE.5449—TE.5460
TE.5468
TE.5469
TE.5471—TE.5474
TE.5476
TE.5477
TE.5478
TE.5481—TE.5485
TE.5487—TE.5489
TE.5491—TE.5494
TE.5496
TE.5498—TE.5502
TE.5504—TE.5508
TE.5510
TE.5512—TE.5514
TE.5516—TE.5522
TE.5524—TE.5528
TE.5530
TE.5532
TE.5533
TE.5535—TE.5537
TE.5539
TE.5540
TE.5542—TE.5544
TE.5547—TE.5549
TE.5552
TE.5553
TE.5555—TE.5560
TE.5562—TE.5570
TE.5572
TE.5574—TE.5577
TE.5579—TE.5581
TE.5583
TE.5586
TE.5587
TE.5589
TE.5590
TE.5592—TE.5594
TE.5596

Tractor Numbers *(continued)*

TE.5598—TE.5600
TE.5606—TE.5611
TE.5614—TE.5619
TE.5621—TE.5623
TE.5626—TE.5631
TE.5633—TE.5636
TE.5638—TE.5644
TE.5646
TE.5648—TE.5651
TE.5653—TE.5657
TE.5660
TE.5662
TE.5663
TE.5665
TE.5666
TE.5668—TE.5672
TE.5674—TE.5687
TE.5689—TE.5715
TE.5717—TE.5719
TE.5721
TE.5722
TE.5724
TE.5725
TE.5727—TE.5743
TE.5746—TE.5750
TE.5752
TE.5754
TE.5756
TE.5758—TE.5771
TE.5774—TE.5786
TE.5788
TE.5790—TE.5803
TE.5805—TE.5813
TE.5815—TE.5817
TE.5819—TE.5834
TE.5836—TE.5846
TE.5848—TE.5866
TE.5868—TE.5884
TE.5886
TE.5887
TE.5889
TE.5890
TE.5892—TE.5894
TE.5896—TE.5905
TE.5907
TE.5908
TE.5910—TE.5916
TE.5918
TE.5919
TE.5921—TE.5926
TE.5928—TE.5945
TE.5947—TE.5963
TE.5966—TE.5968
TE.5970—TE.5978
TE.5980—TE.5990
TE.5992
TE.5993
TE.5995—TE.5999
TE.6001
TE.6003
TE.6004
TE.6006
TE.6007
TE.6009
TE.6010
TE.6012
TE.6016—TE.6018
TE.6021
TE.6023
TE.6024
TE.6026
TE.6037
TE.6055
TE.6062
TE.6091
TE.6096
TE.6097
TE.6099—TE.6101
TE.6109—TE.6129
TE.6131
TE.6132
TE.6135
TE.6137—TE.6163
TE.6165—TE.6172
TE.6174—TE.6184
TE.6186
TE.6187
TE.6190—TE.6198
TE.6200—TE.6211
TE.6213—TE.6225
TE.6227—TE.6248
TE.6250—TE.6253
TE.6256—TE.6259
TE.6261—TE.6263
TE.6265—TE.6274
TE.6278—TE.6280
TE.6282—TE.6288
TE.6290—TE.6308
TE.6310—TE.6340
TE.6342—TE.6344
TE.6347—TE.6358
TE.6360—TE.6377
TE.6379—TE.6426
TE.6428—TE.6441
TE.6443—TE.6447
TE.6449—TE.6461
TE.6463—TE.6465
TE.6467
TE.6468
TE.6470
TE.6471
TE.6473—TE.6476
TE.6478—TE.6480
TE.6482
TE.6484
TE.6486—TE.6503
TE.6505—TE.6510
TE.6513—TE.6521
TE.6523
TE.6524
TE.6526—TE.6530
TE.6532
TE.6534
TE.6535
TE.6537—TE.6539
TE.6541—TE.6543
TE.6545—TE.6547
TE.6549—TE.6559
TE.6561
TE.6563
TE.6565—TE.6588
TE.6590
TE.6592—TE.6599
TE.6603—TE.6611
TE.6613
TE.6614
TE.6616—TE.6631
TE.6633—TE.6640
TE.6643
TE.6645—TE.6651
TE.6653—TE.6682
TE.6684
TE.6685
TE.6687—TE.6706
TE.6709—TE.6716
TE.6718—TE.6724
TE.6726—TE.6732
TE.6734—TE.6738
TE.6740—TE.6753
TE.6755
TE.6757—TE.6759
TE.6761—TE.6763
TE.6765—TE.6769
TE.6771—TE.6784
TE.6786—TE.6808
TE.6810—TE.6818
TE.6820
TE.6822—TE.6824
TE.6826
TE.6828—TE.6833
TE.6836
TE.6838
TE.6840
TE.6849
TE.6850 and future.